NC
~~3-6,89~~
nc5.7
C10 incl

TM 11-5135-15

DEPARTMENT OF THE ARMY TECHNICAL MANUAL

PROPERTY OF ARMY EDUCATION CENTER

RADIO SET CONTROL AN/GSA-7

HEADQUARTERS, DEPARTMENT OF THE ARMY

MAY 1958

WARNING

DANGEROUS VOLTAGES EXIST IN THIS EQUIPMENT

Be careful when working on 115-volt or 230-volt ac line connections or on the 120-volt dc B+ circuits. Serious injury or death may result from contact with these terminals.

RADIATION HAZARD

Tube type OB2WA contains a small amount of radioactive material and is potentially hazardous. Contact qualified medical personnel immediately in case of an accidental cut from a broken tube. For further information, see TB SIG 225.

TECHNICAL MANUAL
No. 11-5135-15

HEADQUARTERS,
DEPARTMENT OF THE ARMY
WASHINGTON 25, D. C., 7 *May 1958*

RADIO SET CONTROL AN/GSA-7

	Paragraph	Page
CHAPTER 1. INTRODUCTION		
Section I. General.		
Scope	1	3
Forms and records	2	3
II. Description and data.		
Purpose and use	3	4
System application	4	4
Technical characteristics	5	4
Components of Radio Set Control AN/GSA-7	6	6
Description	7	6
Additional equipment required	8	9
CHAPTER 2. INSTALLATION AND OPERATION		
Section I. Service upon receipt of equipment.		
Unpacking	9	10
Checking unpacked equipment	10	10
Installation	11	10
II. Operating instructions.		
Operating controls	12	13
Operating procedures	13	13
CHAPTER 3. ORGANIZATIONAL MAINTENANCE		
Section I. Preventive maintenance.		
Tools, materials, and test equipment required	14	16
Preventive maintenance techniques	15	16
Use of preventive maintenance form	16	16
II. Troubleshooting at organizational maintenance level.		
Extent of instructions	17	19
Visual inspection	18	19
Equipment performance checklist	19	19
Tube testing techniques	20	20
CHAPTER 4. THEORY		
General	21	21
Local telephone ring circuit	22	21
Ring radio circuits	23	22
Transfer relay K4 circuits	24	23
Transmit circuits	25	24
Warning tone and ring radio oscillator	26	24
Gate generator and gated amplifier	27	25
Receive circuits	28	27
Carrier operated relay K2	29	27
Monitor at radio set control	30	27
Power supply	31	28
CHAPTER 5. FIELD MAINTENANCE		
Section I. General troubleshooting techniques.		
General instructions	32	30
Troubleshooting procedures	33	30
Test equipment required	34	33
II. Troubleshooting.		
Checking filament and B+ circuits for shorts	35	33
Localizing troubles	36	34
Dc resistances of transformers and coils	37	35
III. Repairs.		
General parts replacement techniques	38	39
Disassembly	39	39

CHAPTER 5. FIELD MAINTENANCE—Continued

	Paragraph	Page
Section IV. Final testing.		
Check of 1,600-cps output level	40	39
Check of 20-cps output level	41	39
CHAPTER 6. SHIPMENT AND LIMITED STORAGE AND DEMOLITION TO PREVENT ENEMY USE		
Section I. Shipment and limited storage.		
Disassembly of equipment	42	41
Repackaging for shipment or limited storage	43	41
II. Demolition of material to prevent enemy use.		
Authority for demolition	44	42
Methods of destruction	45	42
APPENDIX I. REFERENCES		43
II. MAINTENANCE ALLOCATION CHART		45

CHAPTER 1

INTRODUCTION

Section I. GENERAL

1. Scope

a. This manual describes Radio Set Control AN/GSA–7 (fig. 1) and covers its installation, operation, theory, organizational and field maintenance, and repair. In this manual, Radio Set Control AN/GSA–7 is also referred to as radio set control.

b. The two appendixes of this manual are—

Appendix I, References

Appendix II, Maintenance Allocation Chart

c. The repair parts and special tool lists will be published separately.

2. Forms and Records

a. Unsatisfactory Equipment Reports. Fill out and forward DA Form 468 (Unsatisfactory Equipment Report) to Commanding Officer, U. S. Army Signal Equipment Support Agency, Fort Monmouth, N. J., as prescribed in AR 700–38.

b. Report of Damaged or Improper Shipment. Fill out and forward DD Form 6 (Report of Damaged or Improper Shipment), as prescribed in AR 700–58 (Army).

c. Preventive Maintenance Form. Prepare DA Form 11–238 (Maintenance Check List for Sig-

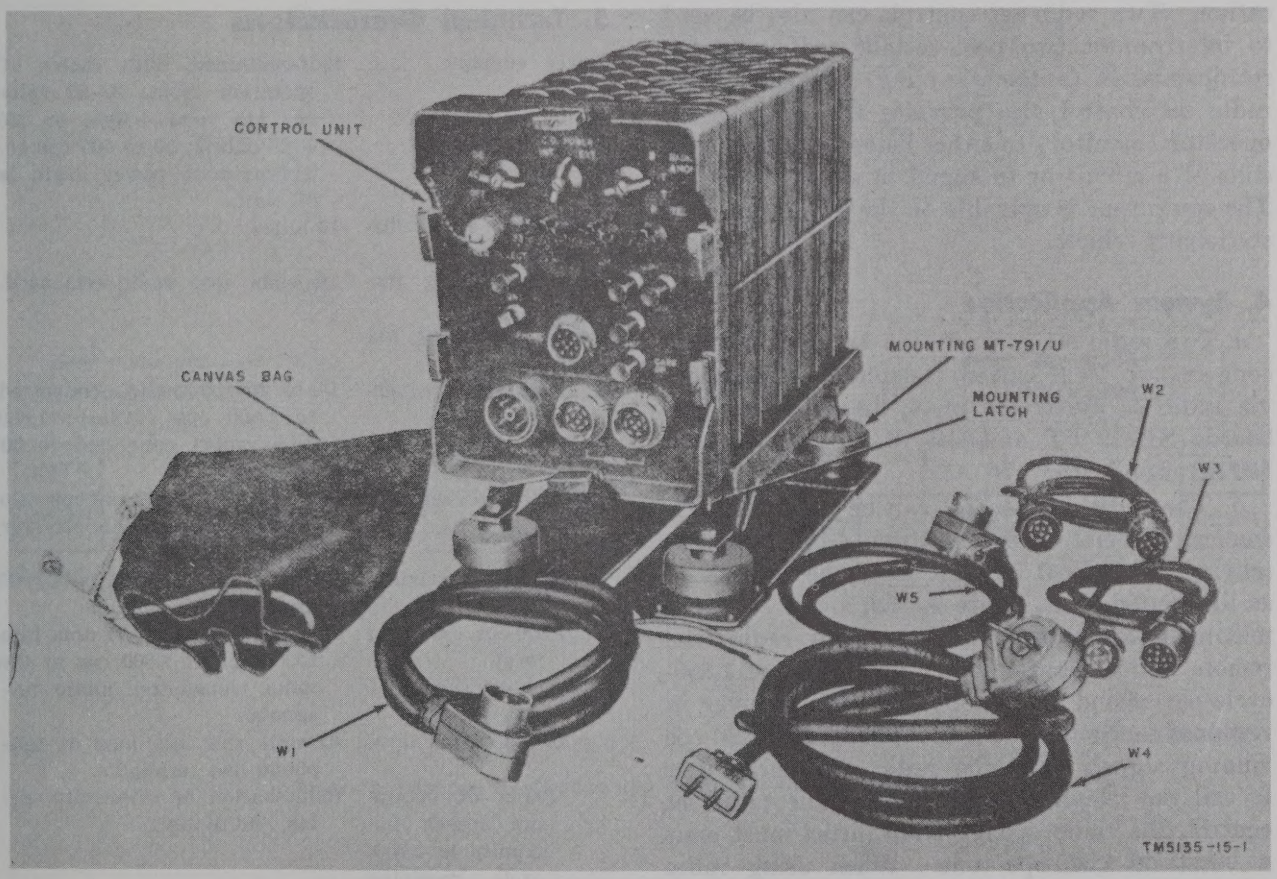

Figure 1. Radio Set Control AN/GSA–7.

nal Equipment (Sound Equipment, Radio, Direction Finding, Radar, Carrier, Radiosonde and Television)) (figs. 8 and 9) in accordance with instructions on the form.

d. Parts List Form. Forward DA Form 2028 (Recommended Changes to DA Technical Manual Parts Lists or Supply Manuals 7, 8, and 9) directly to the Commanding Officer, U. S. Army Signal Equipment Support Agency, Fort Monmouth, N. J. Use for comments on parts listings in appendix II and the repair parts and special tool lists.

e. Comments on Manual. Forward all other comments on this publication directly to the Commanding Officer, U. S. Army Signal Publications Agency, Fort Monmouth, N. J.

Section II. DESCRIPTION AND DATA

3. Purpose and Use

Radio Set Control AN/GSA–7 is a small lightweight electronic switching device for use in integrated wire-radio systems. It is also used to interconnect radio transceivers, or transmitters and receivers, with local battery telephone equipment on a push-to-talk basis. After the radio set control is connected and power is applied to it and to the radio, no attendant is necessary. The associated radio transmitter is turned on and off automatically by the wire equipment user. The radio set control can be used in wire-to-wire (via radio), wire-to-radio, or radio-to-wire communication. Two radio set controls can also be used to interconnect two push-to-talk radio sets for retransmission (automatic relay) purposes. The radio set control also provides facilities for an operator (monitor) to either listen or talk to both ends of a circuit or to signal in either direction. The equipment is operable on the ground, or in a stationary vehicle.

4. System Application

a. Two radio set controls can be used to interconnect two local battery telephone equipments via radio as illustrated in A, figure 2. Switchboards SB–22/PT and SB–18/PT can be used for this application.

b. The radio set control can be used to interconnect a remote radio location, either fixed or moving, with local battery telephone equipment as illustrated in B, figure 2. On a call from the telephone equipment to the remote radio, the remote radio operator will hear a burst of 1,600-cycle-per-second (cps) tone from his receiver in response to the telephone equipment user's 20-cps ringing signal. For the radio equipment user to call the telephone equipment of the radio set control, the radio station transmitter must emit a burst of 1,600-cps tone. When using radio transmitters in the Radio Transmitter RT–66/GRC, –67/GRC, and –68/GRC series, this can be accomplished by momentarily holding the transmitter DIAL LIGHT-RING switch in the RING position.

c. Two radio set controls may be used for retransmission purposes as illustrated in C, figure 2. Each radio receiver must have either a carrier-operated relay or direct current (dc) voltage output when receiving a radio frequency (RF) carrier to enable the radio set control to retransmit messages from the receiver of one radio set to the transmitter of the other radio set.

5. Technical Characteristics

Power supply	Self-contained, with choice of operation from: 22–30 volts dc; 115 volts +10%, or 230 volts ±10%, 50 to 400 cps ac. Approximate power drain is 25 watts.
Maximum wire distance.	10 miles.
Maximum radio distance.	Depends upon radio sets used.
Means of ringing via radio:	
Ringing frequencies.	15 to 25 cps (wire) converted to 1,600 cps (radio); 1,600 cps (radio) converted to 20 cps (wire).
1,600-cps sensitivity.	—20 dbm of 1,600 ±30 cps into 600 ohms at the radio receiver audio terminals.
20-cps sensitivity	20 volts rms applied to LINE terminals.
1,600-cps output level.	Between —6 and —11 dbm into 150 ohms at 1,600 cps at the radio transmitter audio terminals.
20-cps output level	40 volts rms minimum at telephone line terminals.
Means of obtaining speech immunity in 1,600-cycle receiving circuit.	Combination of selectivity, delay, and limiter.

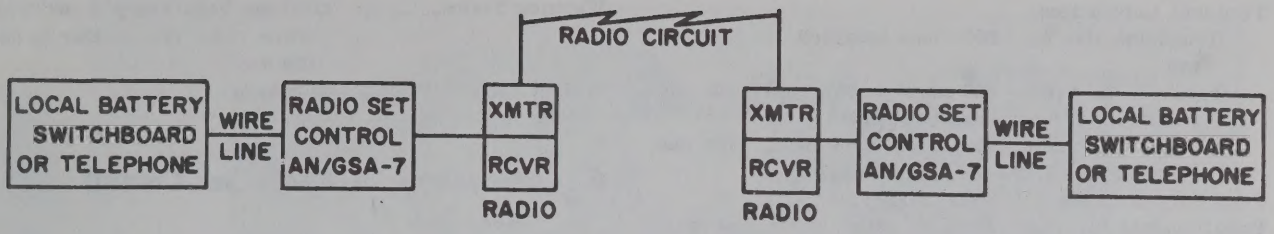

A

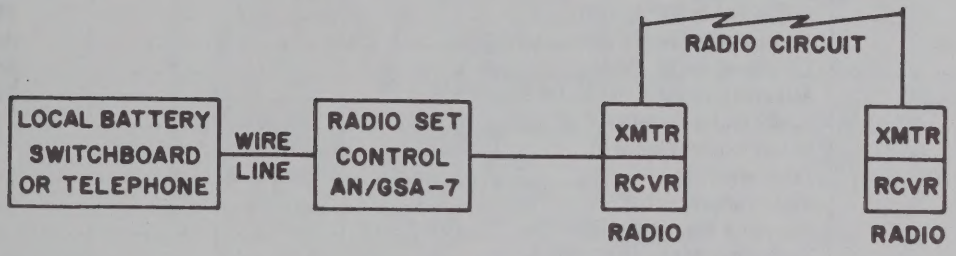

B

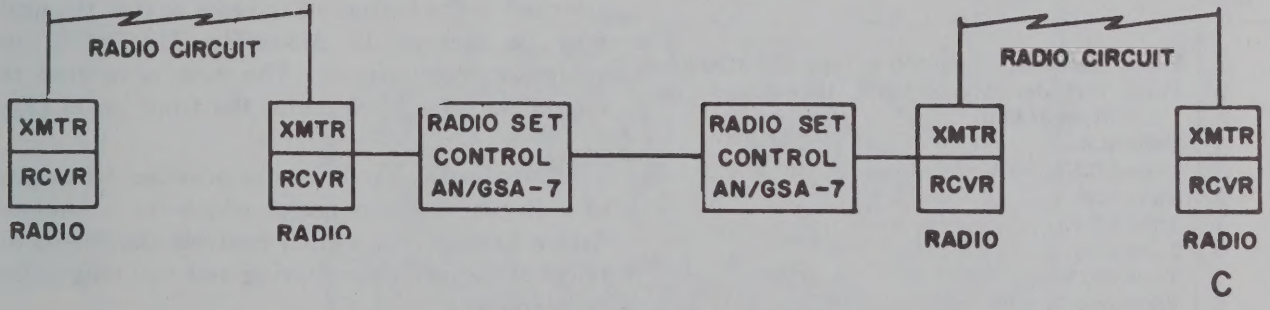

C

TM 5135-15-2

Figure 2. System applications of Radio Set Control AN/GSA-7.

Terminal impedances:	
Telephone line input.	600 ohms balanced.
Input from radio receiver.	600 ohms unbalanced with one side grounded.
Output to radio transmitter.	150 ohms unbalanced with one side grounded.
Frequency response	300 to 3,500 cps.
Requirements for carrier-operated relay or carrier-operated voltage in radio receiver.	Needed only when retransmission is contemplated.
Warning device	2,000-cps beep every 5 seconds while radio transmitter is on the air.
Weight (control unit with mounting).	39 pounds.

6. Components of Radio Set Control AN/GSA–7

a. Components. The components of Radio Set Control AN/GSA–7 are listed in the following table:

Quantity	Components	Height (in.)	Width (in.)	Length (in.)	Unit weight (lb)
1	Control unit	9	7¼	12⅞	27. 5
1	Mounting MT–791/U	3⅞	8¾	12¾	11. 8
1	Canvas bag		8½	16½	
2	Audio cable (W2, W3)			30	1
1	Ac power cable (W4)			84	2
1	Dc power cable (W1)			84	2
1	Auxiliary control cable (W5)			36	1
5	5/16–24 bolts (w/nuts			1¼	
5	5/16–24 bolts w/nuts			¾	
5	Lock washers				
5	Flat washers				
1 set	Running spares (*b* below)				3
2	Technical Manual 11–5135–15				. 5
	Total				50. 3

b. Running Spares. The group of running spares supplied with each radio set control is listed below—

Quantity	Item
5	Fuses, cartridge, 1 amp 250 v, type F02G1R00A.
5	Fuses, cartridge, 1 amp 125 v, time-delay, type Littelfuse 313001.
1	Tube 6C4.
1	Tube 5725/6AS8W.
1	Tube 5696.
1	Tube 5814A.
1	Tube 5651.
1	Tube 0B2WA.
5	Vibrators, 24 v dc.

7. Description

a. The control unit is completely self-contained as illustrated in figure 1. It is a compact, lightweight panel-and-chassis assembly with an immersion-proof outer case. The front panel mounts the operating controls, cable connectors, and binding posts and is recessed to prevent damage to the controls by impact. The panel-chassis assembly is attached to the case with six wing-type, spring-loaded Dzus fasteners. Channel rails are attached to the bottom of the case so that the unit may be secured to Mounting MT–791/U in vehicular installations. The case is secured to the mount by a latch under the front panel (fig. 6).

b. Monitoring facilities are provided by means of a 10-pin audio connector which can accommodate a handset. A switch controls the choice of telephone or radio monitoring and will ring radio or telephone.

c. Figure 3 shows the control unit (top view) with the case removed. The interior is made up of two chassis, one upper level and one lower level. The lower level chassis is secured to the front panel, and the upper level chassis is attached to the lower with a piano-type hinge, two Camloc fasteners (accessible through the holes

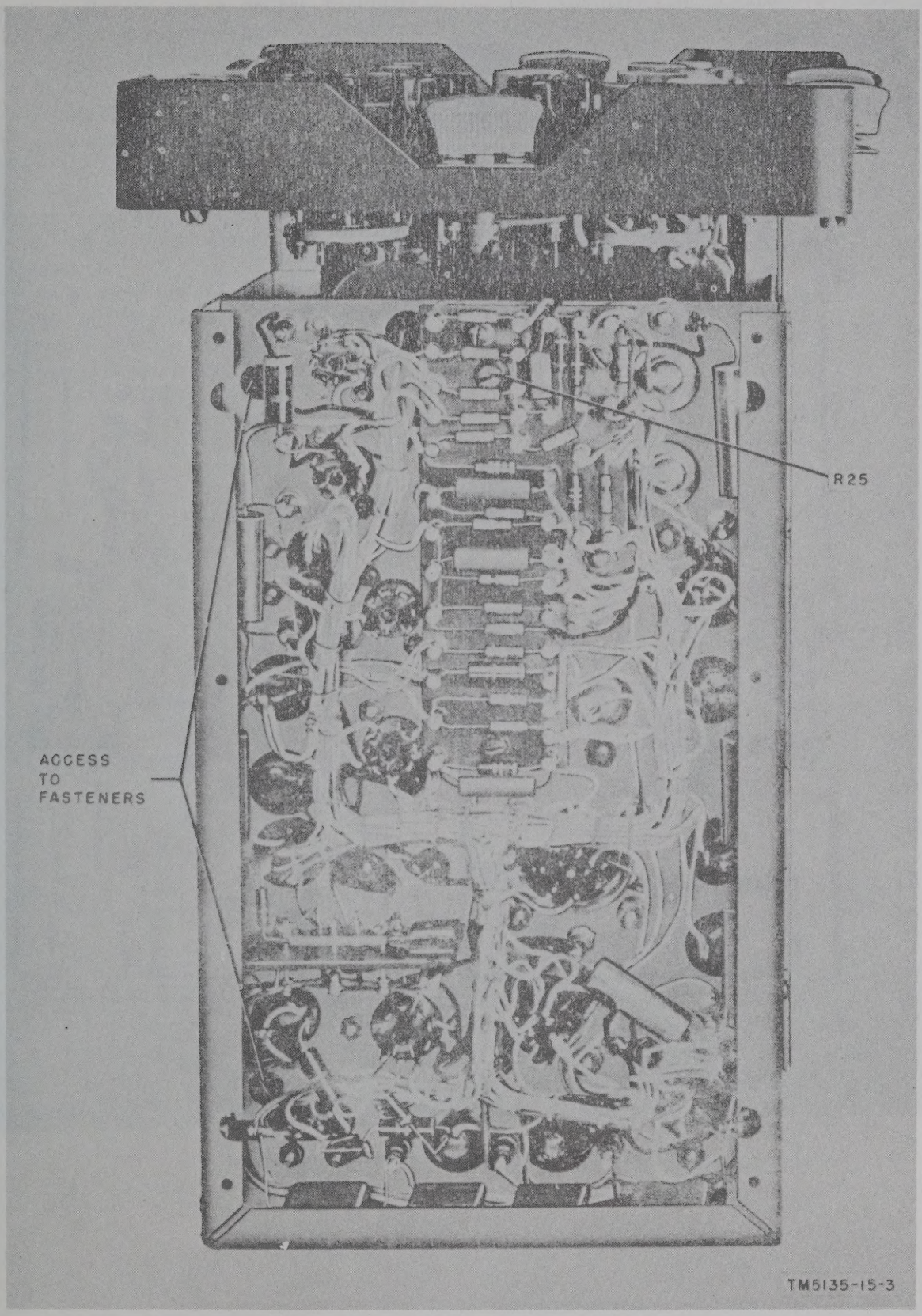

Figure 3. Control unit, case removed, top view.

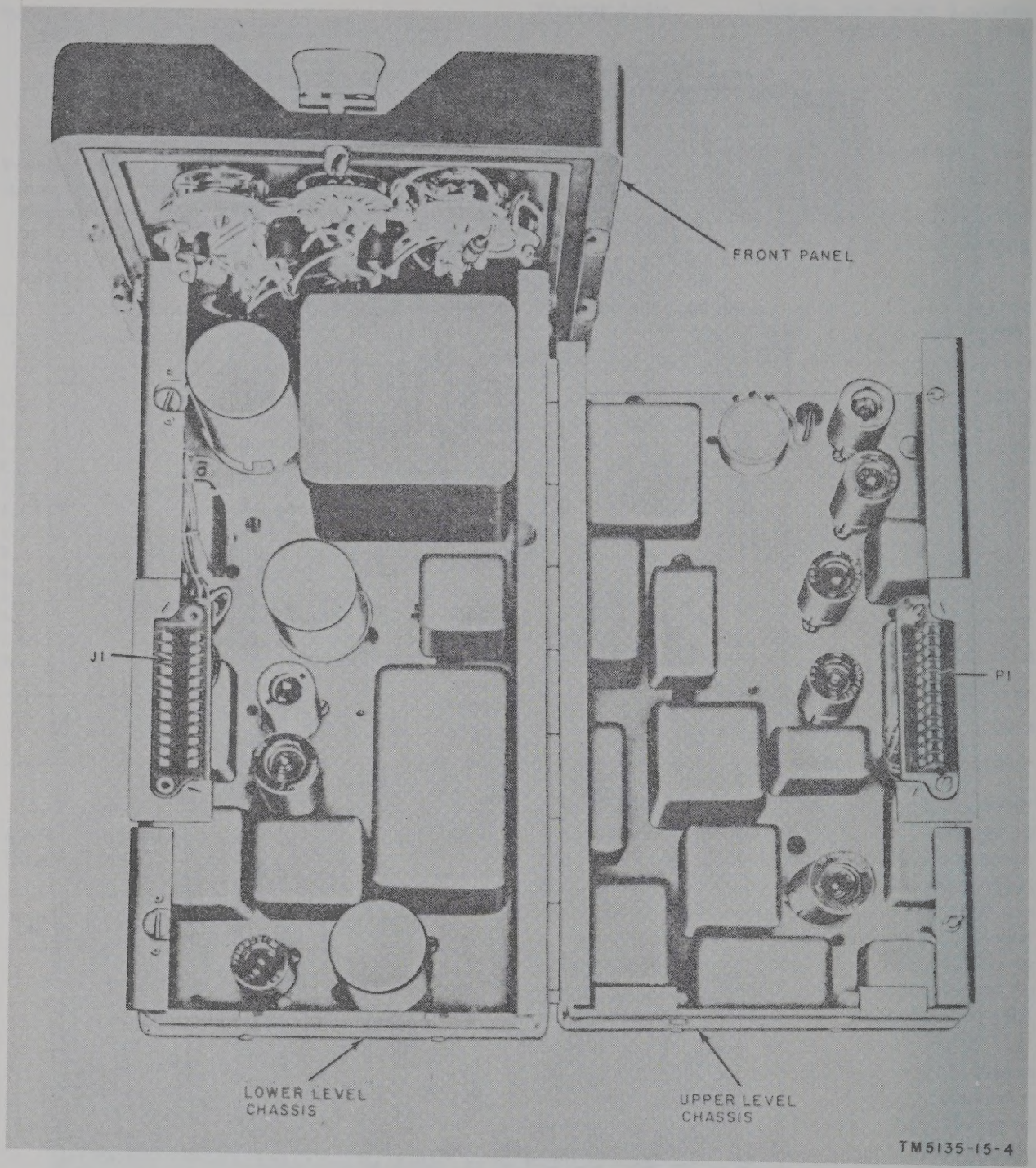

Figure 4. Control unit, upper level chassis swung open.

indicated), and two screws on the backplate. When the two fasteners are unlocked and the two screws are loosened, the two chassis can be separated as shown in figure 4. Electrical connections between the two chassis are made by the 24-contact receptacle and plug, J1 and P1.

d. There are five cables which connect to the front panel—

(1) Dc power cable W1, for connection to a 24-volt dc source through POWER receptacle.

(2) Ac power cable W4, for connection to a 115- or 230-volt, 50 to 400 cps ac power source through POWER receptacle.

(3) Signal cables W2 and W3 which connect to the RADIO receptacles.

(4) Auxiliary control cable W5 which connects to CARR. OP. and AUX binding posts for operation of the carrier operate relay when required for retransmission purposes.

8. Additional Equipment Required

The following handset, not supplied with the radio set control, and one of the indicated power sources are required for operation of Radio Set Control AN/GSA–7.

a. Handset H–33/PT or equivalent.

b. Power source, 115 volts or 230 volts ac, 50 to 400 cps.

c. Power source, 24 volts dc.

CHAPTER 2

INSTALLATION AND OPERATION

Section I. SERVICE UPON RECEIPT OF EQUIPMENT

9. Unpacking

a. Packaging Data. When packaged for shipment, the components of Radio Set Control AN/GSA–7 are placed in corrugated cardboard cartons and four radio set controls are packed in a wooden packing case. The wooden case is 30 inches by 30 inches by 22 inches high. The total weight is approximately 235 pounds. Figure 5 shows typical packaging. Each radio set control, when packaged, is in a single container 13 inches high by 13 inches wide by 18 inches long. The package weighs 55 pounds.

b. Removing Contents. Perform all the steps outlined below when unpacking equipment contained in wooden boxes (fig. 5).

(1) Cut and fold back the metal straps.

(2) Remove the nails from the top and one side of the box with a nail puller. Remove the top and one side. Do not attempt to pry them off because the equipment may become damaged.

(3) Open the carton and remove the two technical manuals, the control unit on its mount, and the spare parts carton. The spare parts carton contains the running spares (par. 6*b*), a small bag of nuts and bolts, and a canvas bag (fig. 1) with cables W1 through W5.

10. Checking Unpacked Equipment

a. Check the equipment received against the list of components (par. 6*a*).

b. Check for damage to the exterior of the equipment.

c. Remove the case by turning each of the six Dzus fasteners ¼ turn counterclockwise and pulling the chassis from the case.

d. Insert a screwdriver into the two access holes (fig. 3) and turn each of the two fasteners ¼ turn counterclockwise.

e. Loosen the two screws on the backplate.

f. Open the two chassis to the position shown in figure 4 and be sure that all tubes and plug-in components are properly seated in their sockets. Inspect for damage.

g. If no damage is evident, reassemble the equipment.

h. Check the cables for kinks, cuts, or fraying.

11. Installation

The installation site depends on the location of the radio set with which the radio set control is to be employed. It must be located immediately adjacent to the radio set so that the signal cables (30 inches in length) can be connected to the radio set.

a. Determine the type of power available and connect the equipment as follows:

(1) For 24-volt dc operation, connect the dc power cable (W1) to the POWER receptacle. The black lead is *negative* and the white lead is *positive.*

(2) For ac operation, remove the protective cap from the 115V–230V POWER SELECT switch. With a screw driver, turn the switch counterclockwise for 115-volt operation or clockwise for 230-volt operation. Connect the ac power cable (W4) to the POWER receptacle and to the power source.

Warning: Never connect the radio set control to a 230-volt source with the POWER SELECT switch in the 115V position.

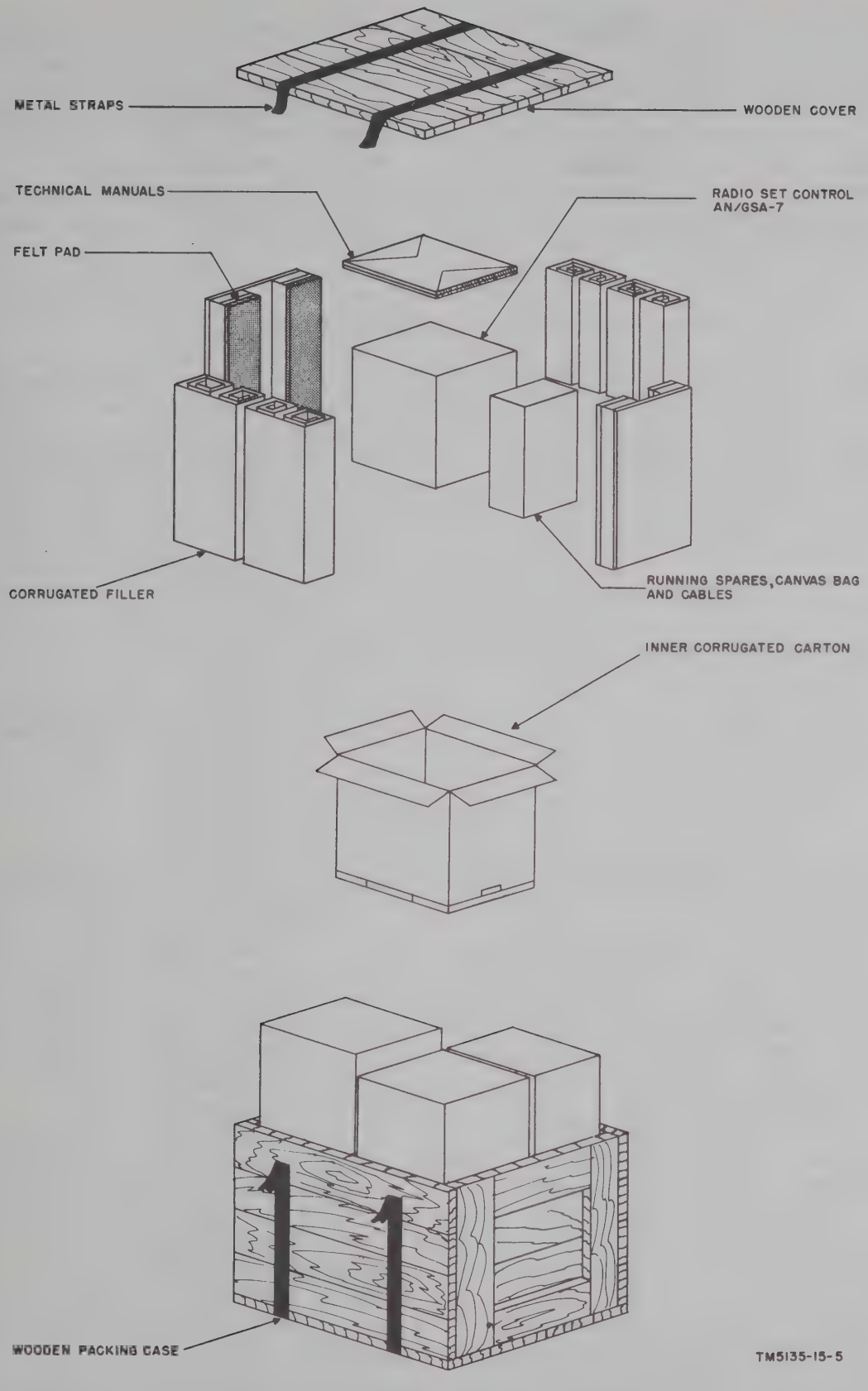

Figure 5. Unpacking Radio Set Control AN/GSA-7.

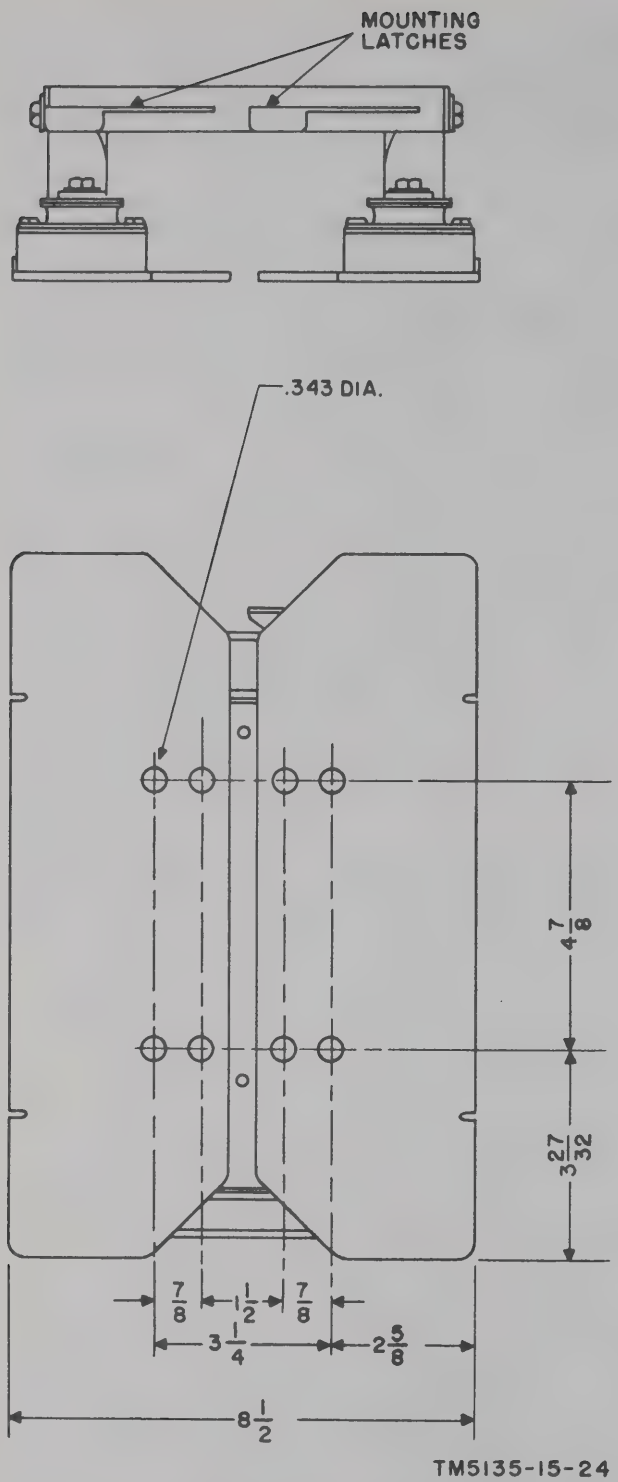

Figure 6. Mounting MT–791/U, mounting hole locations.

b. Locate the equipment so that the signal connecting cables can be plugged into the radio set.

c. To remove the control unit from Mounting MT–791/U, pull the mounting latches (fig. 6) forward, release the control unit and lift it from the mount.

d. Use the mounting as a template or use the dimensions of figure 6 to mark the positions of the mounting holes. Eight holes are provided but only four need be used.

e. Drill the holes and fasten the mounting with four of the 5/16 by 24, 3/4- or 1 1/4-inch long nuts and bolts provided.

f. Replace the control unit on the mounting and re-engage the mounting latches by pushing them back into place.

g. Establish normal radio contact with the desired remote station. Adjust the receiver squelch circuit for normal operation.

h. Connect either one or two signal cables (W2 or W3) from the RADIO receptacles to the radio set. For equipments with a separate receiver and transmitter, connect one signal cable to the transmitter and one to the receiver. (The two radio receptacles and the cables are identical and are wired in parallel.)

i. Set the C. O. POWER (carrier-operated power) switch to the proper position in accordance with the following:

(1) If the radio receiver contains a carrier-operated relay and also makes use of the 10-pin audio connector, no additional connections need be made to the radio set control. Set the C. O. POWER switch to the INT. position.

(2) If the radio receiver (for example, radio sets of the standardized AN/GRC–3 to –8 series) does not contain a carrier-operated relay but provides a carrier-operated voltage, connect auxiliary control cable W5 to the AUX and CARR. OP. terminal posts. Connect the other end to the 9 pin REC-TR receptacle on the front panel of the radio set. Set the C. O. POWER switch to EXT.

(3) If retransmission is not contemplated, the position of the C. O. POWER switch is immaterial. Carrier-operated relay K2 in the radio set control has no function when retransmission is not contemplated.

j. Set the DC-AC-OFF switch to either the AC or DC position, depending on the power source.

k. Connect Handset H–33/PT to the PHONE connector.

l. Press the handset switch and count the number of warning tones (beeps) per minute. Approxi-

mately 12 beeps per minute should be heard. If the number of beeps per minute is incorrect, remove the chassis from the case and, with a screw driver, adjust R25 (fig. 3) to the proper setting. Replace the chassis.

m. Connect the incoming telephone wires to the binding posts marked LINE. When the other end of the incoming telephone line is terminated at a Switchboard SB–22/PT or another radio set control (C, fig. 2), it is necessary to pole the line properly. If the transmitter operates continuously (beeps heard in the handset with the monitor switch in the RADIO & MON position), the line is improperly poled or a short exists in the telephone line. When this occurs, interchange the LINE wires. If the transmitter operates continuously with LINE wires poled either way, check for a short caused by wire damage or by presence of a telephone instrument in the operated condition or CB (common battery) position.

Section II. OPERATING INSTRUCTIONS

12. Operating Controls
(fig. 7)

The POWER SELECT and C. O. POWER switches are set to their proper positions during installation (par. 11*a* and *i*) and are left in those positions as long as the radio set control is used with the same power source and associated radio equipments. The operating controls and their functions are listed in the following chart:

Control	Function
OFF-AC-DC switch.	*Position* — *Function* OFF — Disconnects all power from the radio set control. AC — Connects the ac primary source to the input circuits. DC — Connects 24-volt dc power source to input circuits.
Monitor switch.	Premits ringing and communication with either the local telephone equipment (via telephone line) or remote station (via radio). Switch must be held to remain in either R position. *Position* — *Function* R RADIO & MON — Causes associated transmitter to send a 1,600-cps ringing signal. T RADIO & MON — With handset connected to PHONE receptacle, permits normal push-to-talk operation over the radio system. R TEL — Rings to local telephone switchboard via telephone line. T TEL — Permits conversing to local telephone switchboard.

13. Operating Procedures

a. Before Radio Set Control AN/GSA–7 is operated normally, the system should be checked out by the operator in the following manner:

(1) Turn on the equipment by rotating the DC-AC-OFF switch to the AC position if the primary source is ac or to the DC position if the primary source is dc. In the DC position, a vibration will be felt when the hand is held against the case. This is due to operation of the power vibrator.

(2) After allowing the equipment to warm up for a minute, hold the monitor switch in the R TEL position for several seconds and then release. The switch will return to the T TEL position. This causes a 20-cps ringing signal to be sent to the equipment at the end of the wire line. Communication with the local telephone equipment user is acomplished through the handset.

(3) After communication with the local telephone equipment user has been established, contact the remote operator by radio. This is done by holding monitor switch S4 in the R RADIO & MON position for several seconds. The switch when released will return to the T RADIO & MON position. Two-way communication with the remote operator is then maintained by normal push-to-talk procedure. Allow the transmitter filaments to warm up for a second or two after the handset push-to-talk switch has been closed, before speaking. (This assumes that both radio sets are on and operating properly and that any telephone circuits at the remote station are complete.) Leave the monitor switch in the T RADIO & MON position.

b. When the above procedure has been completed, intercommunication via radio between the

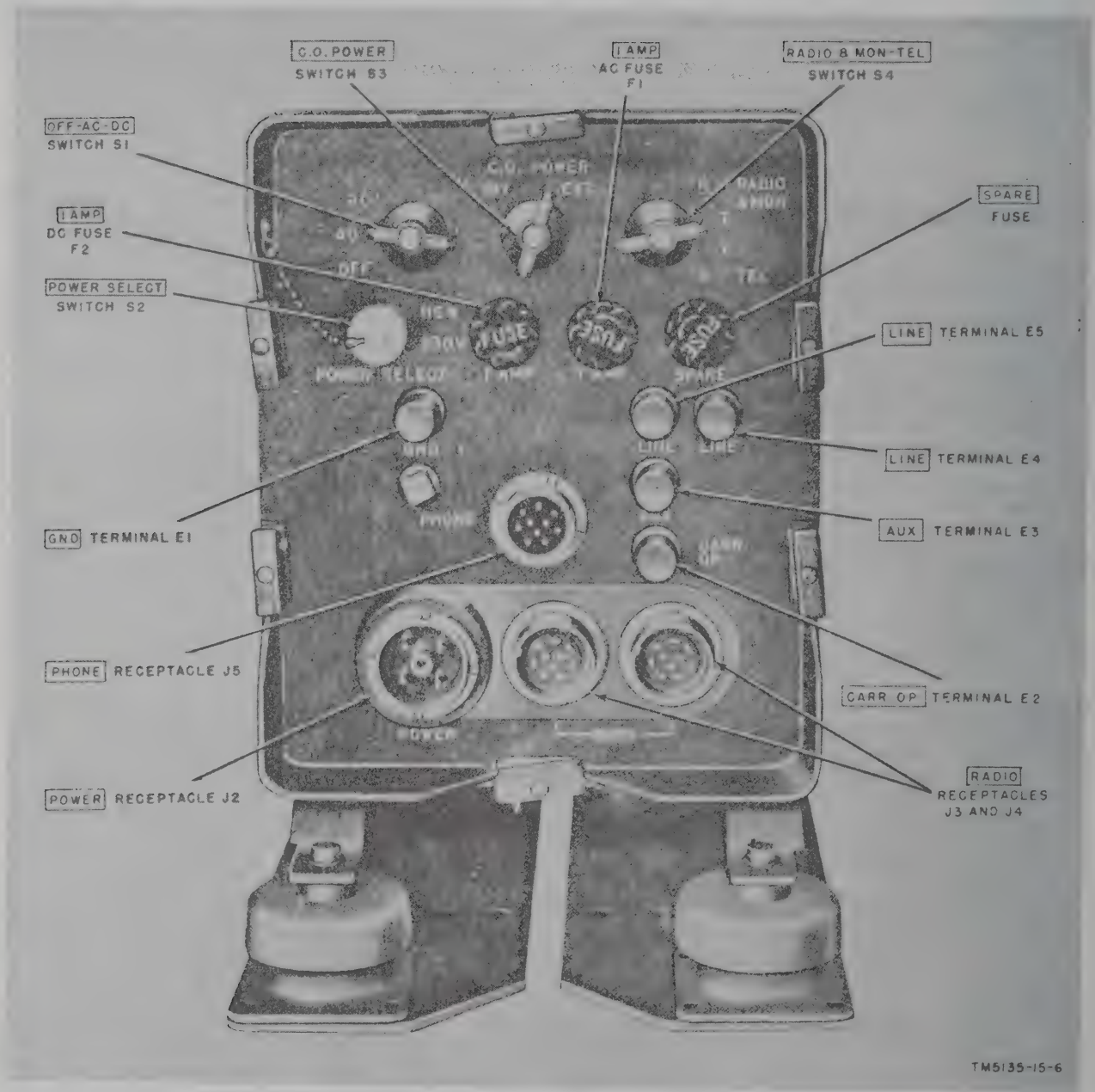

Figure 7. Control unit, front panel.

telephone equipment users (or communication between a radio station and telephone equipment) is automatically maintained when normal ringing and push-to-talk procedures are employed.

c. When the radio set control is used as a link in the communications system, the wire equipment users must use push-to-talk procedure. The presence or absence of a dc closure on the line determines whether the radio transmitters are turned on or off.

(1) When using Telephone Set TA–43/PT (or TA–312/PT) with its switch in the local battery (LB) position, a closure is automatically placed on the line when the handset switch is pressed.

(2) The switch on the operator's headset of Switchboard SB–22/PT places a closure on the line when it is depressed to its furthest position.

(3) When using Telephone EE–8, a closure may be placed across the line or removed from the line by the hook switch when the telephone is in the CB (common battery) position. The hook switch at the telephone must be depressed in the standby condition, otherwise the radio transmitter will be held operated. For Telephone EE–8 to operate in the same manner as Telephone Set TA–43/PT, use Handset H–100/U (Federal stock #5965–223–4744) and place the LB-CB switch in the neutral or middle position to avoid a line closure caused by the EE–8 ringer (LB) or the holding coil (CB).

d. Before turning the equipment off, notify the remote and local switchboard operators and then rotate the OFF-AC-DC switch to the OFF position.

CHAPTER 3

ORGANIZATIONAL MAINTENANCE

Section I. PREVENTIVE MAINTENANCE

14. Tools, Materials, and Test Equipment Required

The tools, materials, and test equipment required for organizational maintenance are listed below.

a. Tools. Tool Equipment TE–41.

b. Materials.

(1) Cleaning Compound (Federal stock No. 7930–395–9542).

(2) Cleaning cloth.

c. Test Equipment.

(1) Multimeter ME–77/U.

(2) Electron Tube Test Set TV–7/U.

15. Preventive Maintenance Techniques

a. Use No. 000 sandpaper to remove corrosion.

b. Use a clean, dry, lint-free cloth or a dry brush for cleaning. If necessary, wipe the parts, including electrical contacts, with a cloth moistened with Cleaning Compound; dry them with a clean cloth.

Caution: Cleaning Compound is flammable and its fumes are toxic. Do not use near a flame; provide adequate ventilation.

16. Use of Preventive Maintenance Form

DA Form 11–238 (figs. 8 and 9) is a preventive maintenance checklist to be used by the operator and the unit repairman. Items 1 through 4 are checked daily and items 5 through 12 are checked weekly by the operator. Items not applicable to the equipment are lined out in the figures. References in the ITEM block in the figure are to paragraphs that contain additional maintenance information about the particular item. Instructions for use appear on the form.

a. First Echelon Items (fig. 9).

Item No.	Maintenance procedure
3	Check the spring-return action of the spring-loaded monitor switch.
10	Check connections at binding posts for tightness and for frayed wire strands.

b. Second and Third Echelon Items (figs. 8 and 9).

Item No.	Maintenance procedure
15	Check seating of tubes, V1 through V8, pluck-out capacitors C1 and C11 (fig. 21), pluck-out vibrator G1.
25	Check the rubber gasket at the rear of the front panel for cracks or poor sealing.

ADDITIONAL ITEMS FOR 2D AND 3D ECHELON INSPECTIONS		CONDITION
26. ~~INSPECT ANTENNA FOR ECCENTRICITIES, CORROSION, LOOSE PIN, DAMAGED INSULATORS AND REFLECTORS.~~		
27. CHECK FOR NORMAL OPERATION.	PAR. 13	✓
28. ~~BEFORE SHIPPING OR STORING, REMOVE BATTERIES~~		

IF DEFICIENCIES NOTED ARE NOT CORRECTED DURING THE INSPECTION, INDICATE ACTION TAKEN FOR CORRECTION.

MAINTENANCE CHECK LIST FOR SIGNAL EQUIPMENT
SOUND EQUIPMENT, RADIO, DIRECTION FINDING
RADAR, CARRIER, RADIOSONDE AND TELEVISION
(AR 750-625)

EQUIPMENT NOMENCLATURE: RADIO SET CONTROL AN/GSA-7

EQUIPMENT SERIAL NUMBER: 398

INSTRUCTIONS

This form may be used for a period of one month by using the correct dates and weeks of the month. It is to be used as a Preventive Maintenance check list for Signal equipment in actual use, or for a check on equipment prior to issue.

1. For detailed Preventive Maintenance instructions see:
   a. The Technical Manual *(in TM 11 series)* for the equipment. *(See DA Pamphlet Number 310-4)*
   b. The Supply Bulletin *(SB 11-100 series)* for the equipment. *(See DA Pamphlet Number 310-4)*
   c. The Department of the Army Lubrication Order. *(See DA Pamphlet Number 310-4)*

2. The following action will be taken by either the Communications Officer/Chief for 1st echelon, or the Inspector for higher echelon:
   a. Enter Equipment Nomenclature and Serial Number.
   b. Strike out items that do not apply to the equipment.

3. Operator/Inspector will enter in the columns entitled CONDITION, on the proper line, a notation regarding the condition, using symbols specified under LEGEND.

4. After operator completes each daily inspection he will initial over the appropriate dates under "Daily Condition for Month", then return form to his supervisor.

TYPE OF INSPECTION

OPERATOR	2/3 ECHELON	DATE	SIGNATURE
✓		May 5	Jay R Ham, Cpl
✓		May 12	Jay R Ham, Cpl.
	✓	May 15	Roy G. Barrie M/Sgt

FOLD

4

DA FORM 1 MAY 57 11-238

REPLACES DA FORMS 11-238, 1 NOV 55; 11-239, 11-244, 11-245, 11-246, 11-249, 11-280, AND 11-281; WHICH ARE OBSOLETE.

TM5135-15-7

Figure 8. DA Form 11-238, pages 1 and 4.

LEGEND for marking conditions:
Satisfactory, ✓.
Adjustment, Repair or Replacement required, X.
Defect corrected, (X).

DAILY CONDITION FOR MONTH OF

NO.	DAILY ITEM	1 9H 17	2 9H 18	3 9H 19	4 7H 20	5 9H 21	6 OD 22	7 OD 23	8 9H 24	9 9H 25	10 9H 26	11 7H 27	12 9H 28	13 6D 29	14 6D 30	15 31	16	2D 3D ECHELON
1.	COMPLETENESS AND GENERAL CONDITION OF EQUIPMENT. (~~Components, receiver, carrying cases~~, wire, cables, microphones, ~~tubes~~, spare parts, technical manuals).	✓	✓	✓	✓	✓	✓	✓	✓	✓	✓	✓	✓	✓	✓			✓
2.	CLEAN DIRT AND MOISTURE FROM ~~ANTENNA~~, MICROPHONES, HEADSETS, ~~KEYS~~, ~~JACKS~~, PLUGS, COMPONENT PANELS.	✓	✓	✓	✓	✓	✓	✓	✓	✓	✓	✓	✓	✓	✓			✓
3.	INSPECT CONTROLS FOR NORMAL OPERATION. ~~TAP CONTROLS LIGHTLY FOR EVIDENCE OF CUT-OUT FROM LOOSE CONTACTS~~. PAR. 16a	✓	✓	✓	✓	✓	✓	✓	✓	✓	✓	✓	✓	✓	✓			✓
4.	CHECK FOR NORMAL OPERATION OF EQUIPMENT. BE ALERT FOR UNUSUAL OPERATION OR CONDITION. PAR. 13	✓	✓	✓	✓	✓	✓	✓	✓	✓	✓	✓	✓	✓	✓			✓

WEEKLY	CONDITION EACH WEEK 1ST	2D	3D	4TH	5TH	2D 3D ECH
5. CLEAN ~~AND TIGHTEN~~ EXTERIORS OF CASES, ~~RACKS~~, MOUNTS, ~~TRANSMISSION LINES~~.	9H	9H				✓
6. INSPECT CASES, MOUNTS, ~~ANTENNA TOWERS~~ AND EXPOSED METAL SURFACES FOR RUST, CORROSION.	7H	9H				✓
7. INSPECT ~~CORDS~~, CABLE, WIRE, SHOCK MOUNTS FOR CUTS, KINKS, BREAKS, FRAYING, UNDUE STRAIN.	9H	9H				✓
8. ~~CHECK ANTENNA G... WIRES FOR PROPER TENSION OR SA...~~.						
9. ~~INSPECT CANVAS AND LEATHER ITEMS FOR MILDEW, TEARS, FRAYING~~.						
10. INSPECT ACCESSIBLE ITEMS FOR LOOSENESS: SWITCHES, KNOBS, ~~JACKS~~, CONNECTORS, ~~RELAYS, TRANSFORMERS, MOTORS, PILOT LIGHTS, BLOWERS, ETC~~.	9H	9H				✓
11. ~~CLEAN AND/OR INSPECT AIR FILTERS, GRADE NAME PLATES, DIAL AND METER WINDOWS~~.						
12. ~~INSPECT STORAGE BATTERIES FOR DIRT, LOOSE TERMINALS, SPECIFIC GRAVITY, DAMAGED CASES. INSPECT DRY BATTERIES FOR LEAKAGE~~.						

ADDITIONAL ITEMS FOR 2D AND 3D ECHELON INSPECTIONS	CONDITION
13. ~~INSPECT SHELTERS AND COVERS FOR ADEQUACY OF WEATHER-PROOFING, TEARS, FRAYING~~.	
14. CHECK ~~TERMINAL BOX COVERS~~ FOR ~~CRACKS, DIRT, LEAKS~~, DAMAGED GASKETS, ~~GREASE~~.	✓

ADDITIONAL ITEMS FOR 2D AND 3D ECHELON INSPECTIONS	CONDITION
15. INSPECT SEATING OF READILY ACCESSIBLE PLUCK-OUT ITEMS: TUBES, ~~LAMPS~~, FUSES, ~~CRYSTALS~~. ~~CONNECTORS~~, VIBRATORS. ~~PLUG-IN COILS~~. PAR. 16b	✓
16. INSPECT RELAYS ~~AND CIRCUIT BREAKERS~~ FOR LOOSE MOUNTINGS. ~~BAD CONTACTS, MIS-ALINEMENT OF CONTACTS AND SPRINGS, PROPER SPRING TENSION~~.	✓
17. ~~INSPECT VARIABLE CAPACITORS FOR DIRT, MIS-ALINEMENT OF PLATES, LOOSE MOUNTINGS, MOISTURE~~.	
18. INSPECT RESISTORS, BUSHINGS AND INSULATORS FOR CRACKS, CHIPPING, BLISTERING, MOISTURE, DISCOLORATION.	✓
19. CLEAN AND TIGHTEN SWITCHES, ~~TERMINAL BLOCKS~~, ~~BLOWERS~~, RELAY CASES AND INTERIORS OF CHASSIS ~~AND CABINETS~~ NOT READILY ACCESSIBLE.	✓
20. ~~INSPECT TERMINAL BLOCKS FOR LOOSE CONNECTIONS, CRACKS AND BREAKS~~.	
21. INSPECT TERMINALS OF LARGE FIXED CAPACITORS AND RESISTORS FOR DIRT, CORROSION, LOOSE CONTACTS.	✓
22. INSPECT TRANSFORMERS, ~~CHOKES, POTENTIOMETERS~~ AND RHEOSTATS FOR OVERHEATING AND OIL LEAKAGE.	✓
23. ~~INSPECT GENERATORS, AMPLIDYNES, DYNA-MOTORS FOR BRUSH WEAR, SPRING TENSION, ARCING AND FITTING OF COMMUTATOR~~.	
24. ~~INSPECT CATHODE RAY TUBES FOR BURNT SCREEN SPOTS~~.	
25. INSPECT WATERPROOF GASKETS FOR LEAKS, WORN OR LOOSE PARTS.	✓

CONTINUED ON PAGE 4

2 3

GPO: 1957 O—427034

TM5135-15-30

Figure 9. DA Form 11-238, pages 2 and 3.

17. Extent of Instructions

a. Organizational troubleshooting techniques are limited to replacing a faulty plug-in part or locating obvious troubles in cables or components.

b. The troubleshooting techniques are presented in two general procedures, the visual inspection and the use of the equipment performance check list (pars. 18 and 19). Perform these checks after the overall system trouble has been localized to the radio set control.

18. Visual Inspection

Failure of the radio set control to operate properly may be caused by an easily overlooked mechanical or electrical fault. When it fails to perform properly, turn off the power and check for the following:

a. Burned-out fuse.

b. Broken or defective LINE binding posts.

c. Incorrect switch setting.

d. Loose or corroded line wire connections to the binding posts.

e. Dirt, corrosion, or moisture between binding posts which may cause a partial short-circuit between them and greatly reduce the efficiency of the line when transferring signal and control voltages.

f. Worn or broken cables and connectors.

g. Defective or improperly installed capacitors C1 or C11 or vibrator G1.

h. Defective handset (cable, connector, push-to-talk switch, dirty diaphragm).

19. Equipment Performance Check List

a. General. The equipment performance check list helps the unit repairman locate and correct troubles. Repairs are limited to plug-in parts. All corrective measures that the second-echelon repairman can perform are given in the corrective measures column.

b. Procedure. Place the radio set control in operation as a link in the communication system (par. 13). After the equipment has warmed up, perform the steps below in the order given. Observe the operation and perform any corrective measures necessary. If the corrective measures do not fix the equipment, troubleshooting by higher echelon is required. Note on the repair tag how the equipment performed and what corrective measures were taken.

	Step	Action or condition	Normal indications	Corrective measures
START	1	If operating from 24-volt dc source, set S1 to DC position.	Vibrations from power vibrator should be felt when hand is held against case.	Check slo-blo fuse F2, plug-in vibrator G1, power input cable (W1), connection to J2.
START	2	If operating from ac power, set S1 to AC (switch S2 set to proper voltage).	Filaments of tubes should be lighted (only visible after removing case).	Check fuse F1, ac power cable (W4), connection to J2.
OPERATE	3	Crank ringing generator of field telephone.	Radio xmtr should turn on and stay on for approximately 1–10 seconds after cranking ceases.	Check to see that monitor switch is in T RADIO & MON position; check tubes V8 and V6; cable to xmtr (W2 and/or W3).
OPERATE	4	Operate push-to-talk switch of field telephone or handset.	A 1,600-cps note should be heard in the handset.	Check tubes V7 and V4, handset.
			Xmtr should turn on and remain on as long as switch is operated.	Higher echelon repair is required.
			2,000-cps warning tone (beep) should be heard at field phone and in handset at a rate of 12 beeps per minute.	Check tubes V5, V7. Adjust R25 (par. 11*l*).
OPERATE	5	Request operator at remote equipment to send a ringing signal (1,600 cps) via radio.	Field phone should ring	Check tubes V2 and V3.
STOP	6	Set OFF-AC-DC switch to OFF.		

20. Tube Testing Techniques

When trouble occurs, check all cabling, connections, and batteries (if dc power is used) before removing any tubes. If tube failure is suspected, use the applicable procedure below.

a. Use of Tube Tester. Remove and test one tube at a time. Discard a tube only if its defect is obvious or if the tube tester shows it to be defective. Do not discard a tube that tests at or near its minimum test limit on the tube tester. Put back the original tube, or insert a new one if required, before testing the next one.

b. Tube Substitution Method. Replace a suspected tube with a new tube. If the equipment remains inoperative, remove the new tube and put back the original tube. Repeat this procedure with each suspected tube until the defective tube is located.

c. Replacement of Tubes.

(1) Remove the chassis from the case by loosening the six spring-loaded Dzus fasteners at the front; pull the chassis out.

(2) Unlock the two fasteners (fig. 3) and loosen the two screws on the backplate.

(3) Separate the two chassis as shown in figure 4. (Tube locations are shown in figure 21.)

(4) Remove the tube shield by twisting it counterclockwise while pressing down against spring pressure.

(5) Replace the tube and tube shield.

Caution: Do not rock or rotate a tube when removing it from a socket; pull it straight out with a tube puller.

(6) Swing the upper chassis back into position and refasten.

(7) Insert the chassis into the case. Be careful not to pinch any wires between the case and the rear of the front panel. Fasten the six spring-locked Dzus fasteners.

CHAPTER 4

THEORY

21. General

The radio set control is used in wire-radio systems to connect radios (transmitters and receivers) with local battery telephone equipment. Two radio set controls can also be used as an automatic relay between two push-to-talk radio sets (C, fig. 2). When the monitor switch is set at the T RADIO & MON position, the radio set control can be left unattended. Facilities exist, however, for the operator to ring the local telephone, ring the remote radio station and wire equipment user, monitor transmissions, and to communicate with both ends of a circuit as described in paragraph 13.

22. Local Telephone Ring Circuit (fig. 10)

The local telephone can be rung by either of two methods. One method (automatic) uses the incoming 1,600-cps ringing signal from the remote location (and through the local receiver) and the other (manual) is accomplished by holding the monitor switch in the R TEL position. Either method energizes local ringing relay K1 to apply operating voltages to 20-cps ringing generator G2 and to connect the generator output to the radio set control LINE terminals.

a. The 1,600-cps ringing signal output of the radio receiver is applied to terminal A of RADIO

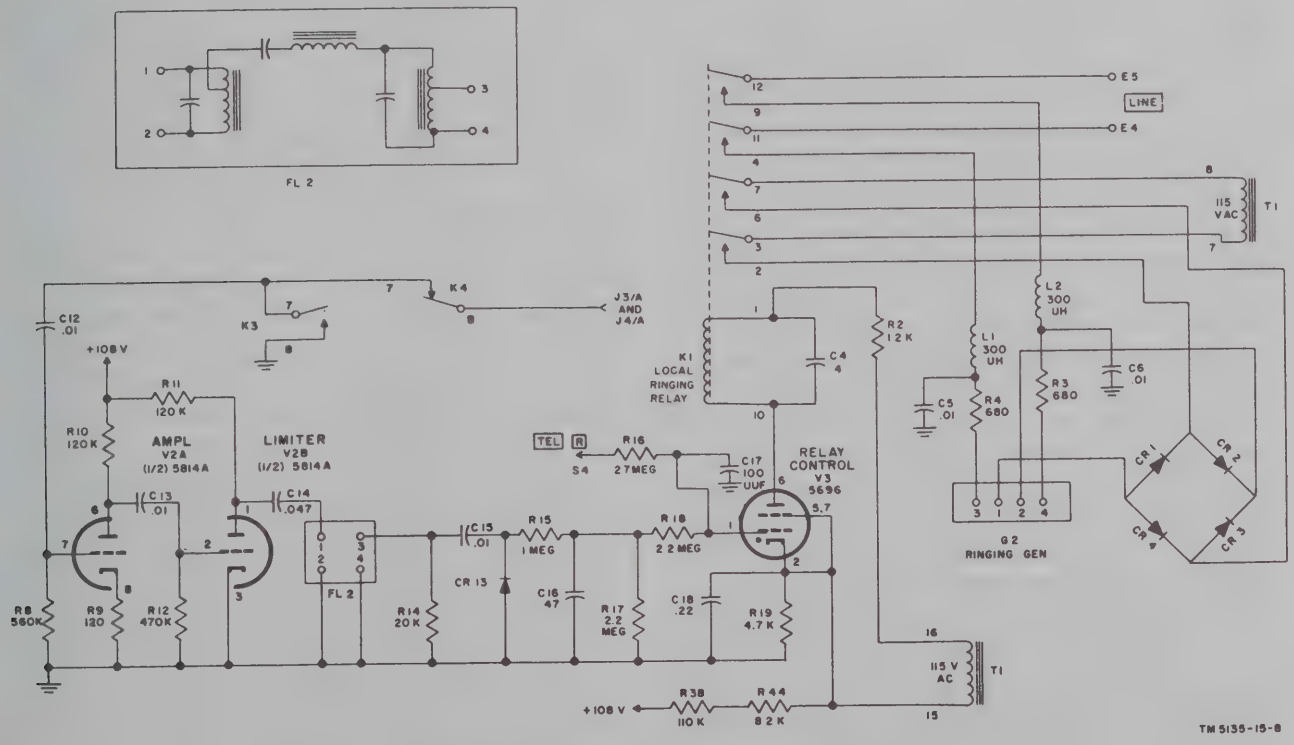

Figure 10. Local telephone ringing circuit.

receptacle J3 or J4 and through capacitor C12 to the grid of amplifier V2A. This circuit is a conventional rc-coupled triode amplifier with cathode resistor bias developed across R9. The amplified signal is coupled to the grid of limiter V2B through capacitor C13. Because grid leak bias only is used in this stage and because of low plate voltage, the 1,600-cps signal is limited in amplitude. The plate load of V2B is filter FL2 which is a resonant circuit tuned to the 1,600-cps ringing signal. The 1,600-cps output of the filter is terminated by R14 and coupled by C15 to a rectifier-integrator circuit made up of CR13, R15, and C16. Because rectifier CR13 effectively grounds out the negative portion of the signal, only the positive portion of the signal is applied to the integrating circuit of R15 and C16. The values of R15 and C16 determine the delay from the time the 1,600-cps signal is received until relay K1 operates. This delay is necessary to prevent false operation on speech and noise. The resulting positive dc signal is applied to the control grid of thyratron V3 through isolating resistor R18.

b. Cathode resistor R19 of relay control tube V3 is part of a voltage divider (R38, R44, and R19) in the 108-volt power supply line. The fixed voltage at the cathode is 4 volts. The plate operating voltage for V3 is 115 volts ac obtained from terminals 15 and 16 of transformer T1. The 115-volt ac output voltage of T1 is applied between the cathode and plate of V3 through R2 and the coil of relay K1. When the plate is positive and the control grid is zero or positive with respect to the cathode, relay control V3 ionizes and causes plate current to flow and energize the coil of relay K1. On the next half-cycle of the plate supply voltage, the plate is negative with respect to the cathode and the tube de-ionizes. Normally, this would cause K1 to become de-energized; however, because it was charged when plate current flowed on the previous half-cycle, C4 now discharges through the winding of K1 and causes the relay to remain energized. The next positive half-cycle will again cause plate current to flow. This action continues as long as the control grid is positive (i. e., for the duration of the incoming 1,600-cps ringing signal). When the 1,600-cps ringing signal ceases, V3 de-ionizes on the next negative half-cycle of the plate supply and remains de-ionized. The delay provided by R15 and C16 prevents false, intermittent operation of relay K1 on speech or noise.

c. When the monitor switch is held in the R TEL position, 24 volts dc is applied to the grid of V3 through resistor R16. Resistor R16 with R18 and R17 form a voltage divider across the 24-volt dc line with the monitor switch in the ring telephone position. Tube V3 conducts continuously as long as the switch is held.

d. When local ringing relay K1 is energized, 115 volts ac is applied from terminals 7 and 8 of T1 to bridge rectifier network CR1-CR4 through contacts 2 and 3 and 6 and 7 of K1. The rectifier output is applied to terminals 1 and 2 of ringing generator G2. The 40-volt rms, 20-cps minimum output of the ringing generator is applied through two filter networks and contacts 4 and 11 and 9 and 12 of K1 to the LINE terminals. The filter network consists of R3, C6, and L2 in one line and R4, C5, and L1 in the other.

23. Ring Radio Circuits
(fig. 11)

The ring radio circuit is used to contact remote telephone equipment or a radio location via a radio link. The ring circuit to the remote radio station is activated in one of two ways: when the local telephone generates a 20-cps ringing signal or when the monitor switch is held in the R RADIO & MON position.

a. The 20-cps ringing signal is applied to the incoming telephone line and through capacitors C27 and C26 to a full-wave bridge rectifier (CR14, CR15, CR16, and CR17). Neon bulb E6 in conjunction with R35 functions as a voltage limiter to prevent the application of more than 80 volts (approximately) to the bridge rectifier circuit. The bridge output, which is a pulsating dc voltage, charges capacitor C28. This voltage is applied to the plate of diode limiter V6 and through R42 to the grid of V8. Capacitor C28 and resistor R37 also serve as an rc time constant circuit. The output of the bridge rectifier sustains a charge on C28 during the time of the ringing signal. When the ringing signal ceases, C28 discharges through R37 and through R42 and R43. A positive voltage is applied to the grid of V8 for a period of 2 seconds after the ringing signal ceases.

b. Because the radio transmitter is turned on and off by the radio set control, the above action insures that the ringing signal is present for a period of time after the transmitter filaments have reached operating temperature.

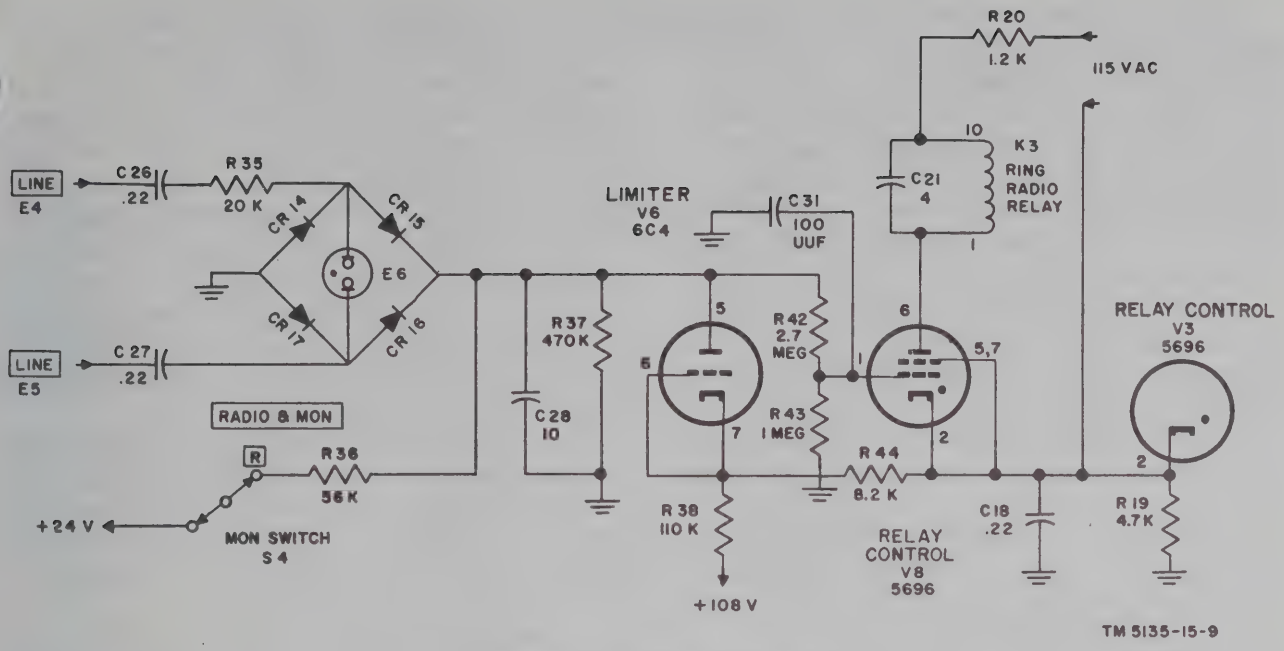

Figure 11. Ring radio circuit.

c. When the monitor switch is held in the R RADIO & MON position, 24 volts dc is applied continuously through R36 to the junction of R37 and C28. Resistors R36 and R37 form a voltage divider network across the 24-volt dc power supply. The voltage at the junction or the dc signal ringing voltage from the rectifier is limited to 12 volts by diode-connected triode V6. The cathode of V6 is held at +12 volts dc by the action of voltage divider R38, R44, and V3 cathode resistor R19. The same voltage divider network holds the cathode of V8 at approximately 4 volts.

d. The voltage at the plate of the limiter (a dc signal up to 12 volts) is applied to the control grid of relay control tube V8 through a voltage divider consisting of R42 and R43. Relay control tube V8 operates in the same manner as relay control tube V3 (par. 22). When the dc ringing signal is applied to the control grid of V8, plate current flows and the coil of ring radio relay K3 is energized. Capacitor C21 keeps the relay energized during the negative portion of the ac supply voltage to V8.

e. When relay K3 operates, the contacts (fig. 16) operate as follows:

(1) Contacts 2 and 11 close; this causes the frequency of oscillator V7B to be shifted to 1,600 cps as described in paragraph 26*a*.

(2) Contacts 9 and 14 close and bring gated amplifier V4 out of cutoff as described in paragraph 27. This allows the 1,600-cps signal from the oscillator to be applied to mixer transformer T2 and from there (through relay K4, contacts 12 and 9) to the transmitter to modulate the rf carrier.

(3) Contacts 7 and 8 close and ground the audio input circuit to V2A from the radio receiver (par. 22*a*); this prevents the operation of the local ringing relay.

(4) Contacts 6 and 13 and 5 and 12 open, removing all loads from the local telephone line except the 20-cps ringing circuit.

(5) Contacts 3 and 4 close and complete the ground circuit for transfer relay K4. The 24-volt dc energizing voltage is applied to the K4 coil when the monitor switch is in the T or R RADIO & MON position. The functions of the K4 contacts are given in paragraph 24.

24. Transfer Relay K4 Circuits (fig. 16)

Transfer relay K4 can be energized by any one of three procedures: during ring radio operation (par. 23*e*(5)), during transmission when the radio set control handset push-to-talk switch is pressed, or during transmission by operation of master transfer relay K5 (par. 25*a*). When relay K4 operates, the contacts operate as follows:

a. Contacts 4 and 11 close and ground the line from F of RADIO jack J3 or J4. This turns on the associated transmitter.

b. Contacts 9 and 12 close and connect winding E of T2 to the transmitter audio input circuits through C23. Ringing tone or warning tone (par. 27*d*) from winding F and/or speech from the telephone line, winding B (par. 25*d*), is transferred to winding E.

c. Contacts 5 and 6 open and break the circuit to the coil of carrier-operated relay K2. This prevents the receiver from actuating K2 during transmission (par. 29).

d. Contacts 2 and 3 open and prevent receiving audio output from the receiver while transmitting.

e. Contacts 7 and 8 open and break the audio input circuit to amplifier V2A. This disables the 1,600-cycle amplifier when transmitting.

25. Transmit Circuits

(fig. 16)

When the push-to-talk switch of the local telephone is closed, the radio set control turns the transmitter on and effectively connects the telephone line to the speech input of the transmitter. In addition, a 2,000-cps warning tone is mixed with the speech signal to advise the wire line operator that his conversation is being transmitted via radio. During this mode of operation, the various relays are in the position indicated in the following table. The sequence of operation is described in *a* through *d* below.

Relay	Energized	De-energized
K2		X
K4	X	
K5	X	
K3		X
K1		X

a. When the push-to-talk switch in the local telephone handset is closed, a high impedance, low resistance inductance is placed across the telephone line. The circuit involved is shown in figure 16. Because the coil of K5 is split into two sections, and the effective center tap is at alternating current (ac) ground (pin 2 directly to ground, pin 6 through C11C), telephone line balance is maintained. Because the K5 coils have a high impedance, the speech characteristics of the line are unimpaired. When the monitor switch is set in either the R or T RADIO & MON switch position, 24 volts is applied to the coils of K5. Closing the telephone handset switch completes the dc path through winding 6–5 of K5, contacts 7 and 8 of K2, contacts 6 and 13 of K3, contacts 8 and 12 of K1 and through LINE terminal E5 to the field telephone. The dc path continues through the field telephone, LINE terminal E4, contacts 11 and 5 of K1, contacts 5 and 12 of K3, and contacts 3 and 4 of K2, to winding 1–2 of K5. This energizes relay K5 and the contacts operate as explained in *b* and *c* below.

b. Contacts 7 and 8 close. This completes the ground return for relay K4, which operates (paragraph 24) to turn the transmitter on and connect audio from the field telephone or the handset at the radio set control to the speech input circuits of the transmitter.

c. Contacts 3 and 4 close and connect the gate generator V5 output to the control grid of gated amplifier V4 (fig. 13). The pulses from V5 help to provide the warning tones during transmission.

d. Speech signals from the telephone are applied through contacts of unenergized relays K1 and K3 and through contacts of K2 (K2 energized or not, par. 29) to transformer winding B. From winding B, the audio signal is induced into winding E and is then applied to the transmitter audio input circuits when K4 is energized.

26. Warning Tone and Ring Radio Oscillator

(fig. 12)

The oscillator circuit, which normally generates a continuous 2,000-cps tone, performs two functions. When the radio set control is in the transmitting condition (par. 25), this tone is transmitted through gated amplifier V4 (par. 27) in such a manner that short bursts, or *beeps*, of the 2,000-cps tone are obtained. These beeps are in turn applied across the telephone line and serve to advise the telephone equipment user that the conversation is being transmitted via radio. The other function of the oscillator is to provide the 1,600-cps signal which is used to ring via radio.

a. The oscillator employs a standard Clapp circuit. The operating frequency of the oscillator is determined by the series-resonant circuit of L4 in series with paralleled capacitors. The normal frequency determining capacitors are C35 and C34. With only C35 and C34 in the circuit, the oscillator frequency is approximately 2,000 cps. When ring

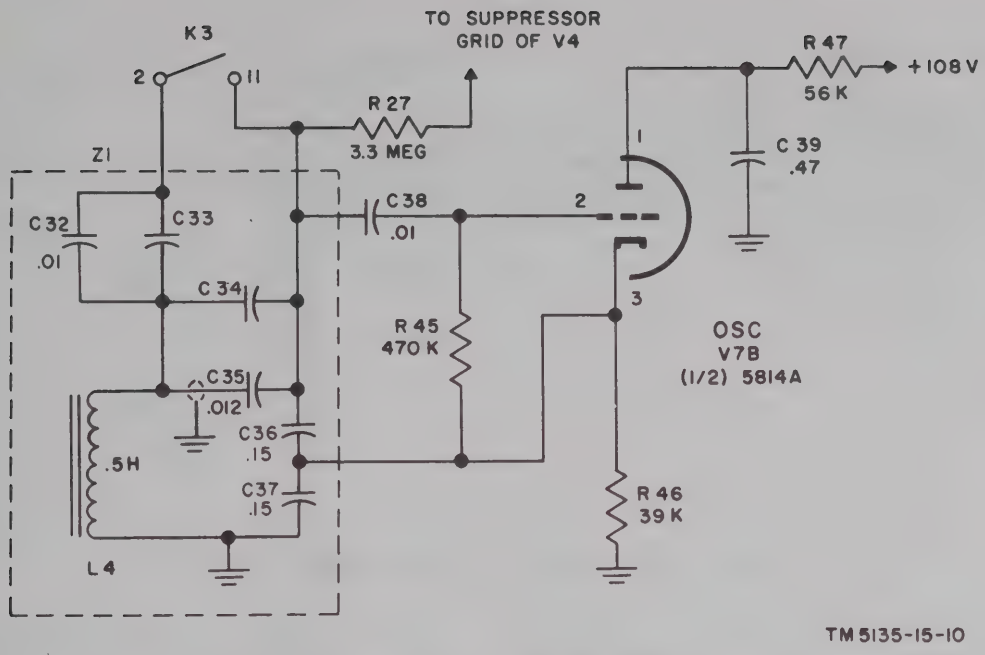

Figure 12. Warning tone and ring radio oscillator circuit.

radio relay K3 is energized by a 20-cps ringing signal from the local telephone equipment or by dc voltage from the monitor switch (par. 23), capacitors C32 and C33 are shunted across C35 and C34. With all four capacitors in the circuit, the resonant frequency of the oscillator is 1,600 cps. The output of the oscillator is coupled through isolating resistor R27 to the suppressor grid (pin 7) of gated amplifier V4.

b. The frequency of the oscillator is factory-adjusted by hand-selecting the values of C33 and C34. These capacitors should not be tampered with. If for some reason the frequency must be adjusted, all components shown on figure 12 as located in Z1 should be replaced.

27. Gate Generator and Gated Amplifier (figs. 13 and 16)

The gate generator applies positive pulses of bias to the grid of the gated amplifier, to allow warning beeps to be heard when the transmitter is on the air. The gated amplifier applies 2,000-cps warning tones or the 1,600-cps ringing tone to mixer transformer T2 during T or R RADIO & MON monitor switch settings respectively. When no tone is needed, the gated amplifier blocks tone from the T2 circuit.

a. Gate generator V5 is a gas tube relaxation oscillator. When 120-volt dc is applied to the V5 circuit, capacitor C25 charges through resistors R25 and R24. Because C25 in series with R24 and R25 forms a long time-constant circuit, C25 requires 4 to 10 seconds (depending on the setting of R25) to charge to 103 volts. When the 103-volt point is reached, V5 ionizes and C25 discharges through it. Because the resistance of V5 is negligible when conducting, the time of discharge of C25 is short (.2 second). The discharge circuit consists of R26 and C25. Capacitor C25 continues to discharge until the plate voltage of V5 is reduced to the point where de-ionization occurs, thus completing 1 cycle of operation.

b. When V5 conducts (during discharge of C25), a positive pulse, .2 second in duration, is produced across cathode resistor R26. When the radio transmitter is on, this pulse is direct-coupled through terminals 3 and 4 of K5 (K5 is energized during radio transmission) to the control grid, pin 1 of gated amplifier V4. The gated amplifier is normally biased to cutoff by fixed bias applied to the cathode from the junction of voltage divider resistors R30 and R31. When the control grid is made positive by the pulse from V5, V4 conducts and, because the 2,000-cps warning generated by oscillator V7B is continuously applied to the suppressor grid, produces .2-second bursts of the 2,000-cps warning tone in the plate circuit. This is applied to winding F of mixer transformer T2.

c. When the radio transmitter is not on and ring radio relay K3 is energized (par. 23), the gated

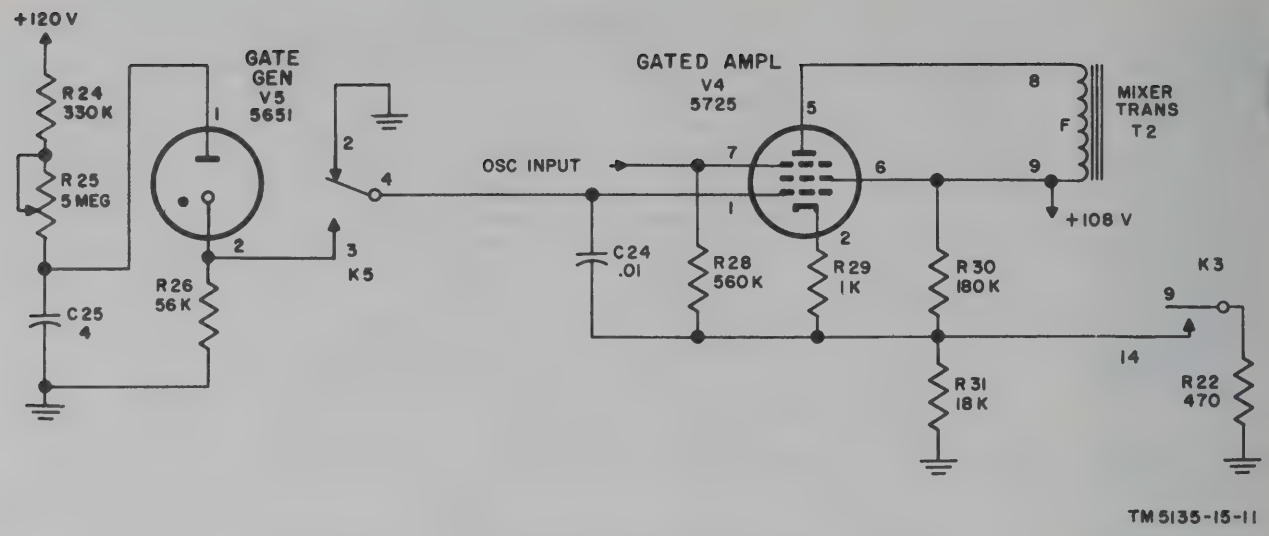

Figure 13. Gate generator and gated amplifier circuits.

amplifier is also placed in operation. When K3 is energized, resistor R22 (fig. 13) is placed across R31 in the gated amplifier circuit. This reduces the cathode bias to a point where V4 conducts. At the same time, capacitors C32 and C33 connected in the oscillator circuit (fig. 12) produce the 1,600-cps ring radio signal. Relay K5 is not operated and the V4 control grid, pin 1, is grounded during ring radio operation. The 1,600-cps ring radio signal supplied to the suppressor grid, pin 7, of V4 is amplified and applied to mixer transformer T2 in the same manner as the warning tone.

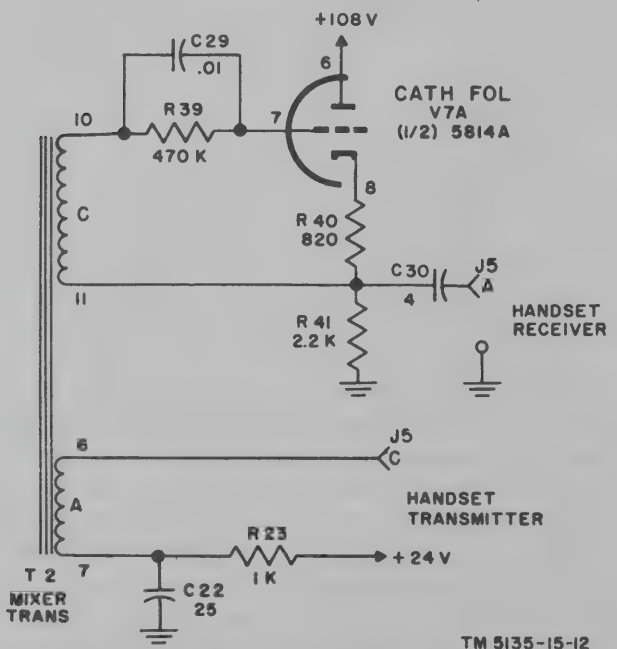

Figure 14. Cathode follower V7A.

d. The output of V4, whether 2,000-cps warning tone or 1,600-cps ringing tone, is applied to mixer transformer T2, winding F. This signal is coupled to output winding E, terminals 4 and 5, and to winding B. Windings B and E of T2 are shown in figure 16. From terminal 4 of winding E, the signal is passed through contacts 12 and 9 (closed when the monitor switch is in either R or T RADIO & MON position) of transfer relay K4 and C23 to terminal C of the RADIO connectors. The audio signal is fed to the transmitter to modulate the rf carrier. The warning tone signal coupled to winding B is applied to the LINE terminals. The circuit from terminal 1 of winding B is completed through terminals 12 and 5 of K3 and 5 and 11 of K1 to LINE terminal E4. The circuit from terminal 2 of winding B is completed through dc blocking capacitor C19, contacts 7 and 8 of K2, contacts 6 and 13 of K3, and contacts 8 and 12 of K1 to LINE terminal E5.

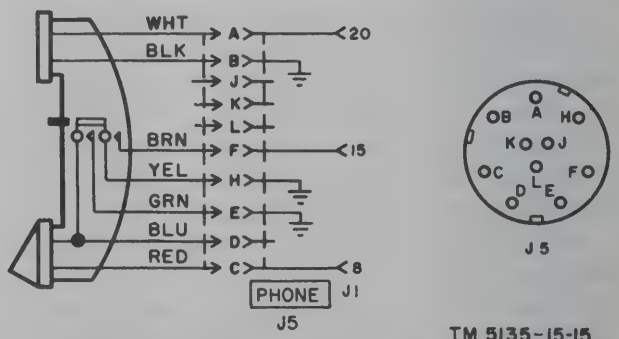

Figure 15. Handset H-33/PT circuit.

NOTES

1. RELAYS SHOWN IN "RECEIVE VIA RADIO" POSITION WITH NO CARRIER BEN(
2. RINGS TELEPHONE WHEN REQUIRED. ENERGIZED BY RADIO RING. (1600 CPS).
3. ENERGIZED BY TELEPHONE RING (20 CPS) TO RING RADIO.
4. ENERGIZED BY TELEPHONE TO TRANSMIT (TALK).
5. HIGH INDUCTANCE LOW DC RESISTANCE OF FIELD PHONE WITH SWITCH CLOSE

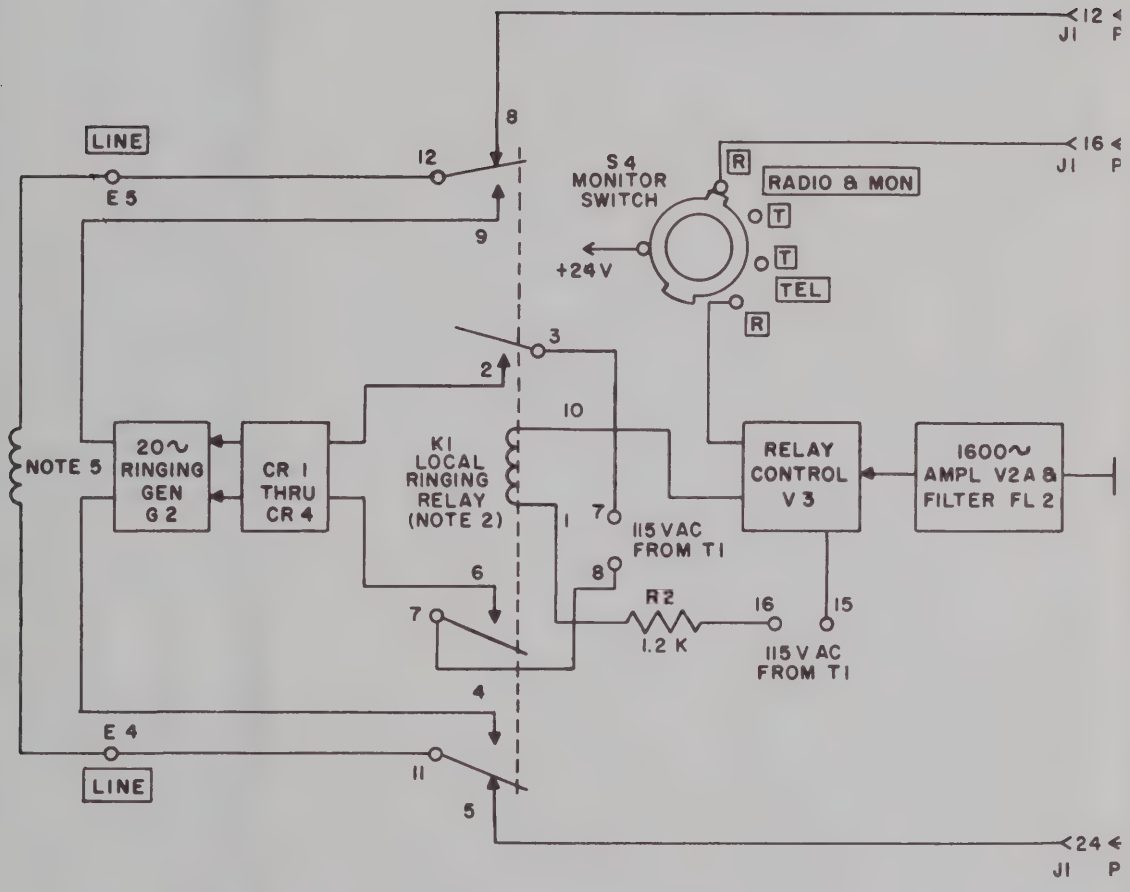

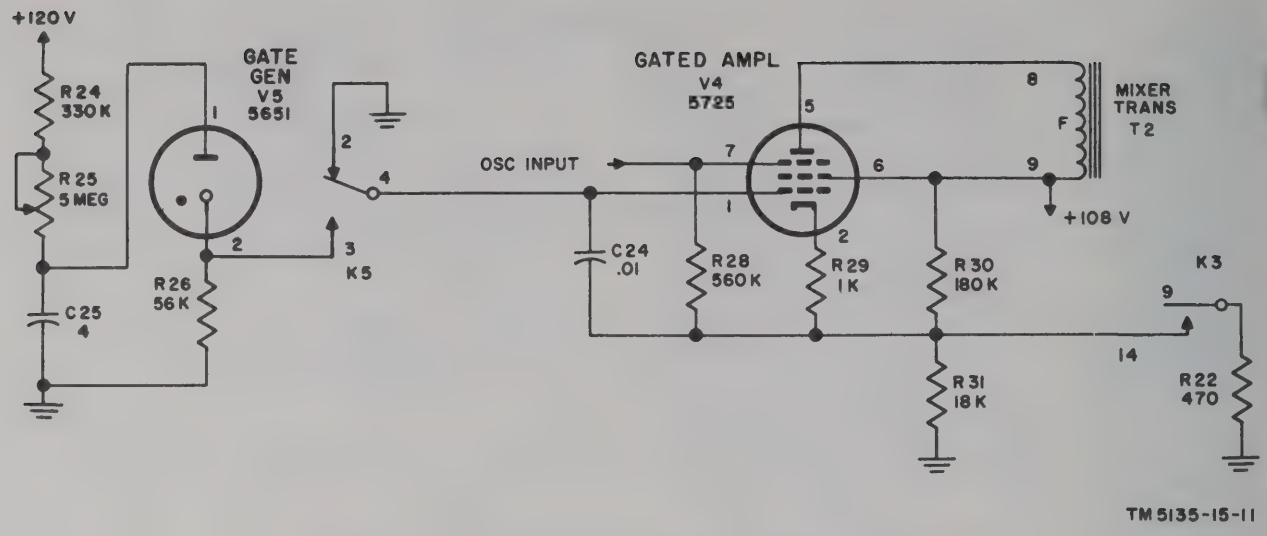

Figure 13. Gate generator and gated amplifier circuits.

amplifier is also placed in operation. When K3 is energized, resistor R22 (fig. 13) is placed across R31 in the gated amplifier circuit. This reduces the cathode bias to a point where V4 conducts. At the same time, capacitors C32 and C33 connected in the oscillator circuit (fig. 12) produce the 1,600-cps ring radio signal. Relay K5 is not operated and the V4 control grid, pin 1, is grounded during ring radio operation. The 1,600-cps ring radio signal supplied to the suppressor grid, pin 7, of V4 is amplified and applied to mixer transformer T2 in the same manner as the warning tone.

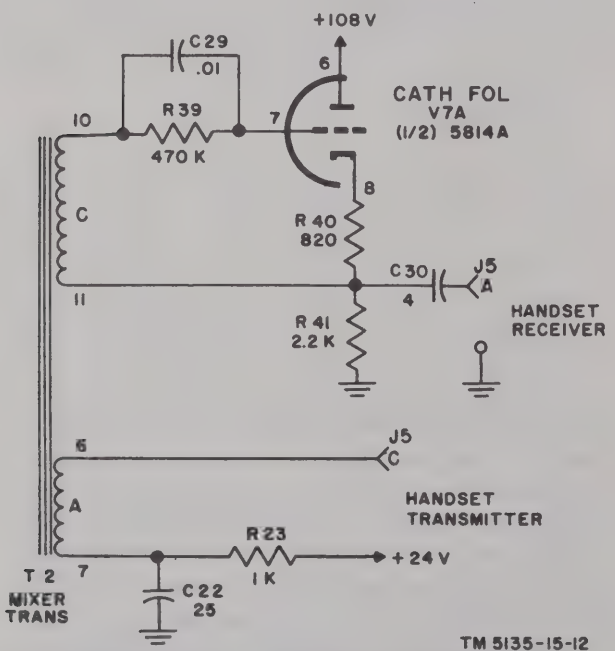

Figure 14. Cathode follower V7A.

d. The output of V4, whether 2,000-cps warning tone or 1,600-cps ringing tone, is applied to mixer transformer T2, winding F. This signal is coupled to output winding E, terminals 4 and 5, and to winding B. Windings B and E of T2 are shown in figure 16. From terminal 4 of winding E, the signal is passed through contacts 12 and 9 (closed when the monitor switch is in either R or T RADIO & MON position) of transfer relay K4 and C23 to terminal C of the RADIO connectors. The audio signal is fed to the transmitter to modulate the rf carrier. The warning tone signal coupled to winding B is applied to the LINE terminals. The circuit from terminal 1 of winding B is completed through terminals 12 and 5 of K3 and 5 and 11 of K1 to LINE terminal E4. The circuit from terminal 2 of winding B is completed through dc blocking capacitor C19, contacts 7 and 8 of K2, contacts 6 and 13 of K3, and contacts 8 and 12 of K1 to LINE terminal E5.

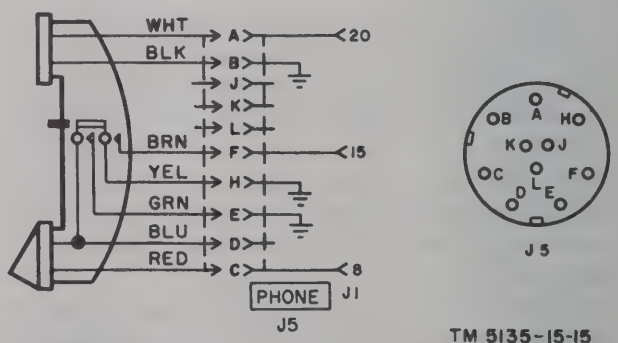

Figure 15. Handset H-33/PT circuit.

NOTES

1. RELAYS SHOWN IN "RECEIVE VIA RADIO" POSITION WITH NO CARRIER BEING RECEIVED (ALL DE-ENERGIZED).
2. RINGS TELEPHONE WHEN REQUIRED. ENERGIZED BY RADIO RING. (1600 CPS.
3. ENERGIZED BY TELEPHONE RING (20 CPS) TO RING RADIO.
4. ENERGIZED BY TELEPHONE TO TRANSMIT (TALK).
5. HIGH INDUCTANCE LOW DC RESISTANCE OF FIELD PHONE WITH SWITCH CLOSED.

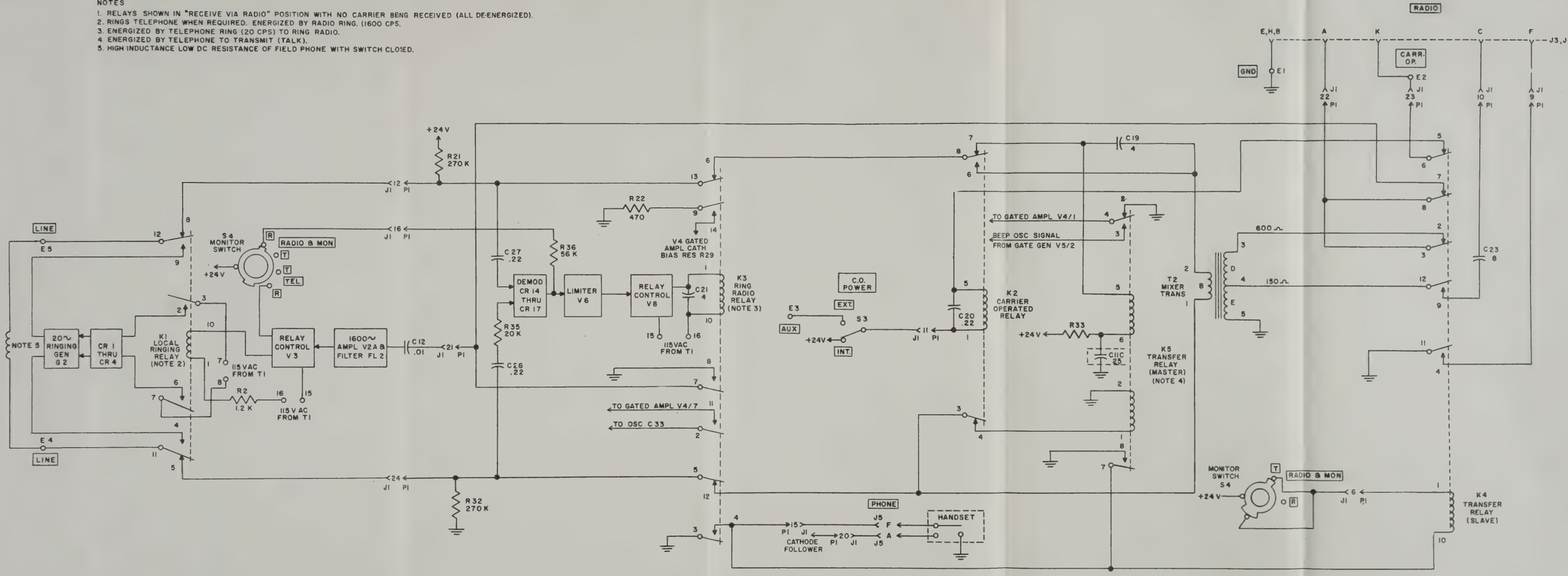

Figure 16. Radio Set Control AN/GSA-7, functional diagram.

TM 5135-15-20

28. Receive Circuits
(fig. 16)

When an audio signal is fed to the radio set control from the radio receiver, all relays remain de-energized except carrier-operated relay K2 (if connected). Operation of K2 is described in paragraph 29.

a. The audio output of the receiver is applied to the radio set control at J3 or J4 pin A and thence through J1 and P1 contact 22 to contacts 3 and 8 of transfer relay K4. The signal at contact 8 is connected through contact 7 to a high impedance circuit at the grid of V2A. This audio signal does not actuate the ringing circuit because of the selective filtering action of FL2 (par. 22*a*).

b. The audio signal at contact 3 is fed through contact 2 to the 600-ohm input (windings D and E) of mixer transformer T2. The signal return to the receiver is made through the common ground connection. The audio signal is fed through winding B of T2 to the local telephone via LINE 1 and 2.

c. The audio signal at T2 is also transferred to winding C of T2 (fig. 14) and fed to cathode follower V7A. The function of the cathode follower stage is to isolate the handset receiver to decrease loading of the audio lines. The audio signal developed across cathode resistor R41 of the cathode follower is applied to the monitor headset receiver through capacitor C30, P1 and J1 terminal 20, and contact A of PHONE connector J5 (figs. 14 and 15).

29. Carrier-Operated Relay K2
(fig. 16)

Carrier-operated relay K2 serves two purposes—to break the circuit to master transfer relay K5 during reception and to control a dc path to allow retransmission as illustrated in C, figure 2.

a. Relay K2 is energized whenever the radio receiver gets a signal. For radio sets which supply power when a signal is received, the C. O. POWER switch is set to the EXT. position. When a signal is received, a minimum dc voltage of 16 volts is supplied by the receiver and is applied to the CARR. OP. binding post. From there the circuit is completed through contacts 5 and 6 of K4 and terminal 23 of J1 and P1 to the coil of relay K2. The other side of the K2 coil is connected to the AUX binding post through terminal 11 of P1 and J1 and the C. O. POWER switch in the EXT. position. The AUX terminal is connected to the receiver to complete the dc path. When the radio receiver contains a carrier-operated relay, pin K of the 10 pin RADIO connector J3, J4 is grounded upon receipt of a signal by the radio receiver. With the C. O. POWER switch set to the INT. position, relay K2 is energized. The energizing voltage is +24v obtained from the C. O. POWER switch S3. The path of the energizing current is as follows: +24v source, through terminal 11 of J1 and P1, the coil of K2, contacts 5 and 6 of K4, terminals 23 of J1 and P1 to pin K of J3 or J4 which connects to ground at the receiver.

b. When K2 is not energized (conditions other than receiving) capacitor C19 blocks a dc path to the coil of master transfer relay K5 through winding B of T2. Relay K5 should only be operated by the circuit described in paragraph 25*a*. When relay K2 operates (during reception), contacts 3 and 4 open to prevent operation of K5. Contacts 8 and 6, however, close and thereby place winding B directly across the telephone line. This is essential to allow retransmission. The B winding of T2 fulfills the same function as the high inductance, low dc resistance of the field telephone described in paragraph 25*a*. It completes the K5 coil circuit of the other remote Radio Set Control AN/GSA–7. The local radio set control, actuated by the radio receiver, takes the place of the local telephone (C, fig. 2).

30. Monitor at Radio Set Control

Through the use of monitor switch S4 and Handset H–33/PT, an operator (monitor) located at the radio set control can ring and talk to the local telephone (or switchboard) on the wire line or to the remote equipment via radio.

a. The monitor can ring the remote equipment via radio by holding spring-return monitor switch, S4, in the R RADIO & MON position (par. 23*c*). This causes a 1,600-cps radio ringing signal to be generated as described in paragraph 23.

b. To receive an audio signal via radio with the monitor switch in the T RADIO & MON position at the monitor position, no action by the monitor is necessary. Any audio signal passing through mixer transformer T2 is sampled by winding C and applied to the receiver of the monitor handset through cathode follower V7A.

c. To transmit a voice signal via radio from the monitor position, it is necessary to set monitor switch S4 in the T RADIO & MON position and press the handset switch. When this is done, only relay K4 is energized (par. 24) and turns the transmitter on. Because K3 is not energized during this mode of operation, no ringing tone is generated. When the handset switch is closed, the microphone circuit is also completed (fig. 15). The output of the handset microphone is fed through terminal 8 of J1 and P1 to winding A, terminal 6, of T2. The operating voltage for the microphone is obtained from the 24-volt source through decoupling resistor R23. Capacitor C22 completes the audio signal path to ground. The audio output of the handset is transferred to winding E of T2 and to the transmitter audio input.

d. When the monitor wishes to ring the local telephone (switchboard), switch S4 must be held in the R TEL position for a short period of time. This operates relay K1 and results in the application of a 20-cps ringing signal to the telephone line as described in paragraph 23.

e. When the monitor wishes to talk to the local telephone or switchboard, the monitor switch must be set to the T TEL position and the push-to-talk switch in the handset must be pressed. The audio output of the handset is fed to the telephone line via windings A and B of T2 in a manner similar to that described in *c* above. In the T TEL position, relay K4 is disabled, and the conversation is not transmitted to the radio transmitter via winding E.

31. Power Supply

(figs. 17 and 25)

a. The power supply provides dc voltages of 120, 108, and 24 volts and an ac voltage of approximately 115 volts. The above voltages are obtained while operating from primary power sources of 115/230 volts ac ±10 per cent, 50 to 400 cps, or from a dc source of 22 to 30 volts. In addition, 25.2 volts ac (filament voltage) is supplied when the equipment is operated on ac.

b. Ac voltage is applied to terminals A and C of the POWER CONNECTOR. The line from terminal A is applied through 1-ampere fuse F1 to switch S1A. In the AC position, it is connected to terminal 1 of the primary winding of T1. The line from terminal C connects to S1B and in the AC position, to POWER SELECT switch S2. In the 115V position, the line is connected to terminal 2; in the 230V position, the line is connected to terminal 3 and the entire primary is in the circuit.

c. When operating from a 24-volt dc source, the power is applied through terminal D of the POWER connector, F2, S1A and terminal 1 of rf hash filter FL1 to the center tap (terminal 5) of the vibrator primary winding. The 24 volts dc is also applied to the winding of vibrator G1. With the reed of G1 in the upper position, terminal 4 of T1 is grounded and this causes current to flow through the T1 winding connected to terminals 5 and 4. At the same time, the vibrator is energized because the coil circuit is also grounded through the reed. The reed is pulled down, grounds the lower contact, and completes the circuit for the T1 winding connected to terminals 5 and 6. The spring action of the reed then returns it to the opposite position, which causes another cycle of operation to start. In this manner, the 24 volt-dc input is effectively changed into an alternating current at T1 and winding 4-6 becomes the transformer primary. Capacitor C10 is a buffer capacitor which prevents sparking at the vibrator contacts. Capacitors C7, C8, and C9 prevent generation of radio interference.

d. The ac voltage developed across terminals 9 and 10 of T1 is applied to full-wave bridge CR5, CR6, CR7, and CR8 for rectification. The negative side of the bridge is grounded and the positive output of the bridge is fed to a pi-type filter made up of C11A, L3, and C11B. Resistor R6 is a series resistor which drops the voltage to 120 volts at the junction of R6 and R7. The 120 volts is applied to the gate generator stage only (fig. 13). Resistor R7 limits the current through voltage regulator V1. The 108-volt output is supplied to the V2, V4, and V7 plate circuits and through voltage divider action to cathode circuits of V3, V6, and V8 (pars. 22*b* and 23*c*).

e. Secondary winding, terminals 11 and 12, produces approximately 25 volts ac which is rectified in the full-wave bridge circuit consisting of CR9, CR10, CR11, and CR12. The output of the rectifier is then fed through voltage-dropping resistor R5, and is used for actuating relays and for local handset microphone button voltage. The 24-volt circuit for the microphone is completed through J1–P1 terminal 14, through voltage-dropping resistor R23, winding A of T2, J1–P1

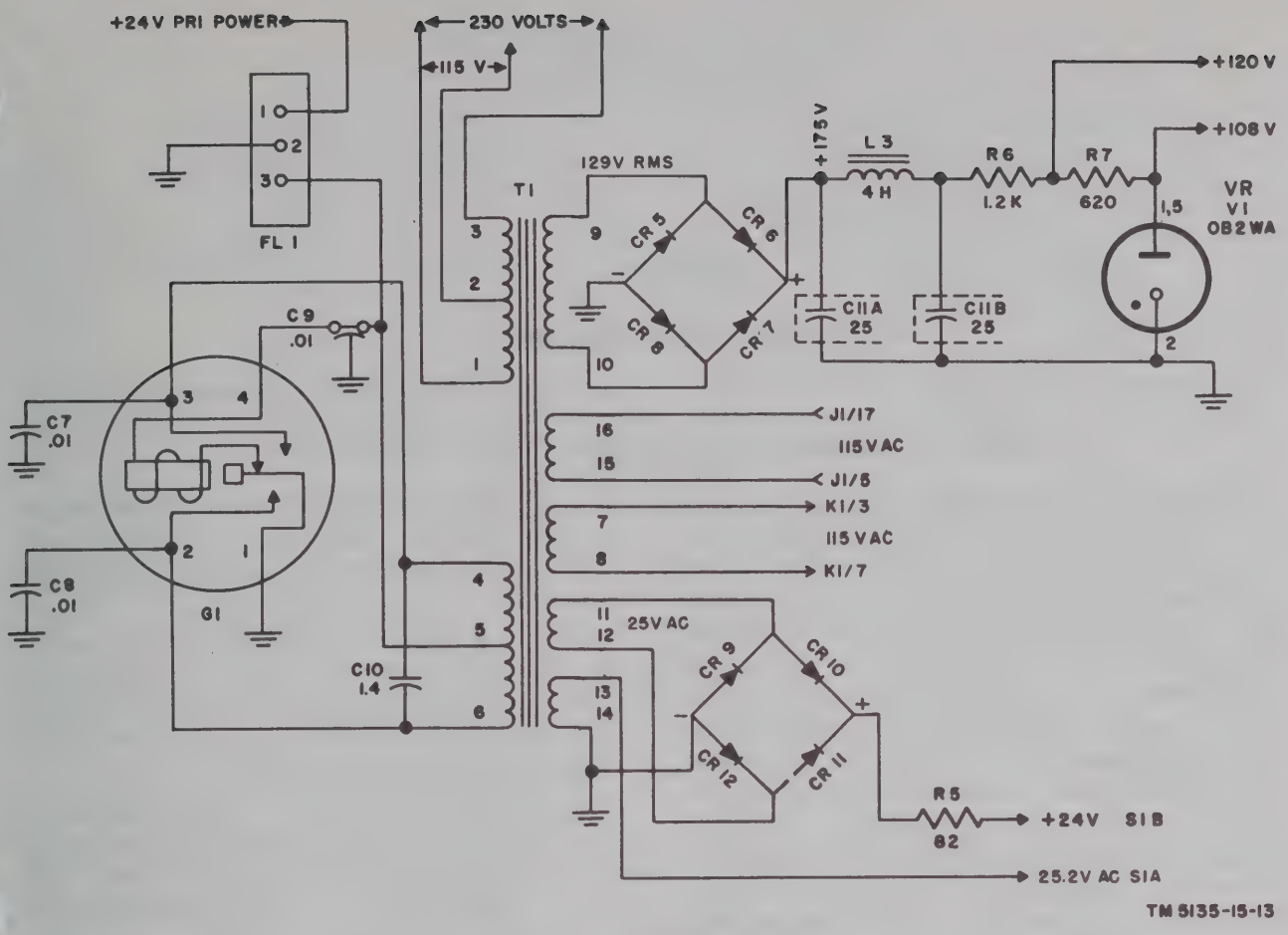

Figure 17. Power supply circuit.

terminal 8, to C of the PHONE connector. When the handset switch is pressed, the circuit is completed to ground through the carbon button to ground. Capacitor C1 prevents hum in the microphone circuit. As shown in figure 25, resistor R1 is connected across C1 in the OFF position of the DC-AC-OFF switch and discharges the 500 microfarad (uf) capacitor to ground.

f. The winding between terminals 7 and 8 produces 115 volts which operates 20-cps ringing generator G2 during ring telephone operation (par. 22).

g. The winding between terminals 15 and 16 also produces a voltage of 115 volts ac. Isolation is needed from winding 7–8 because a dc bias voltage is added to the ac voltage used in the operation of thyratrons V8 and V3.

h. The filament voltage winding terminals 13 and 14 of T1 produces 25.2 volts ac which is used as filament voltage only when operating from an ac primary power source. When operating from a 24-volt battery, the battery supplies the filaments through the DC-AC-OFF switch. The filaments are connected in a series-parallel arrangement (fig. 25). Series-connected filaments of V3, V2, and V4 are connected in parallel with the series-connected filaments of V7, V6, and V8.

CHAPTER 5

FIELD MAINTENANCE

Section I. GENERAL TROUBLESHOOTING TECHNIQUES

Warning: When servicing the radio set control while power is applied, be careful to avoid electrical shock from the input ac or +175-volt dc voltage at exposed terminals. Always turn power switch S1 to the OFF position before making resistance measurements or before touching parts or wiring in the control unit. After power is disconnected, some capacitors may retain a charge. Before touching exposed parts, short the part to ground. Tube type OB2WA contains a small amount of radioactive material and is potentially hazardous. Contact qualified medical personnel immediately in case of an accidental cut. For further information and for disposal of defective type OB2WA tubes, refer to TB SIG 225.

32. General Instructions

Troubleshooting at field and depot maintenance level includes all techniques outlined for organizational maintenance and any special or additional techniques required to isolate a defective part. The field and depot maintenance procedures are not complete in themselves but supplement the procedures described in organizational maintenance. The systematic troubleshooting procedure, which begins with the operational checks that can be performed at an organizational level, must be completed by means of sectionalizing, localizing, and isolating techniques.

33. Troubleshooting Procedures

a. General. The first step in servicing a defective radio set control is to sectionalize the fault. Sectionalization means tracing the fault to a major circuit responsible for abnormal operation. The second step is to localize the fault. Localization means tracing the fault to a defective part responsible for the abnormal condition. Some faults, such as burned-out resistors can often be located by sight or smell. The majority of faults, however, must be localized by checking voltages and resistance.

b. Sectionalization. Listed below is a group of tests arranged to reduce unnecessary work, and to aid in tracing trouble in a defective radio set control. The first step is to locate the unit or units at fault by the following methods:

(1) *Visual inspection.* Visual inspection helps to locate faults without testing or measuring circuits. All visual signs should be observed and an attempt made to sectionalize the fault to a particular circuit.

(2) *Operational tests.* Operational tests frequently indicate the general location of trouble. In many instances, these tests will help in determining the exact nature of the fault. The equipment performance check list (par. 19) is a good operational test. Additional operational tests are given in paragraph 36.

c. Localization. The tests listed below will aid in isolating the trouble. First, localize the trouble to a single stage or circuit, and then isolate the trouble within that circuit by voltage, resistance, and continuity measurements. Use the following methods of trouble localization:

(1) *Voltage and resistance measurements.* These measurements will help locate the individual component at fault. Use resistor and capacitor color codes (figs. 18 and 19) to find the value of the components. Use the voltage and resistance diagram (fig. 20) to find normal readings, and compare them with readings taken.

RESISTOR COLOR CODE MARKING
(MIL-STD RESISTORS)

AXIAL-LEAD RESISTORS (INSULATED)

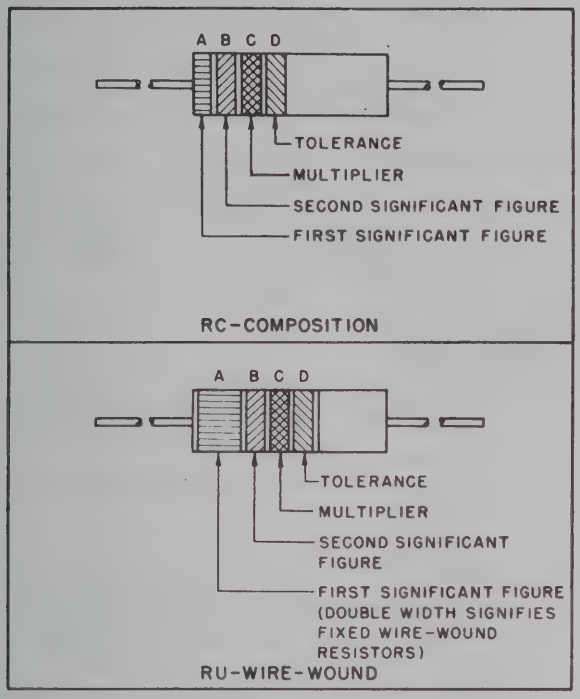

RADIAL-LEAD RESISTORS (UNINSULATED)

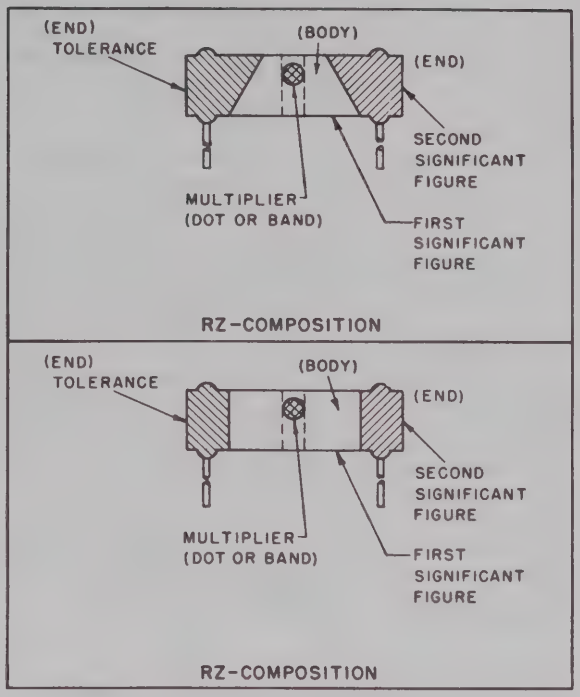

RESISTOR COLOR CODE

BAND A OR BODY*		BAND B OR END*		BAND C OR DOT OR BAND*		BAND D OR END*	
COLOR	FIRST SIGNIFICANT FIGURE	COLOR	SECOND SIGNIFICANT FIGURE	COLOR	MULTIPLIER	COLOR	RESISTANCE TOLERANCE (PERCENT)
BLACK	0	BLACK	0	BLACK	1	BODY	± 20
BROWN	1	BROWN	1	BROWN	10	SILVER	± 10
RED	2	RED	2	RED	100	GOLD	± 5
ORANGE	3	ORANGE	3	ORANGE	1,000		
YELLOW	4	YELLOW	4	YELLOW	10,000		
GREEN	5	GREEN	5	GREEN	100,000		
BLUE	6	BLUE	6	BLUE	1,000,000		
PURPLE (VIOLET)	7	PURPLE (VIOLET)	7				
GRAY	8	GRAY	8	GOLD	0.1		
WHITE	9	WHITE	9	SILVER	0.01		

*FOR WIRE-WOUND-TYPE RESISTORS, BAND A SHALL BE DOUBLE-WIDTH. WHEN BODY COLOR IS THE SAME AS THE DOT (OR BAND) OR END COLOR, THE COLORS ARE DIFFERENTIATED BY SHADE, GLOSS, OR OTHER MEANS.

EXAMPLES (BAND MARKING):
10 OHMS ±20 PERCENT: BROWN BAND A; BLACK BAND B; BLACK BAND C; NO BAND D.
4.7 OHMS ±5 PERCENT: YELLOW BAND A; PURPLE BAND B; GOLD BAND C; GOLD BAND D.

EXAMPLES (BODY MARKING):
10 OHMS ±20 PERCENT: BROWN BODY; BLACK END; BLACK DOT OR BAND; BODY COLOR ON TOLERANCE END.
3,000 OHMS ±10 PERCENT: ORANGE BODY, BLACK END; RED DOT OR BAND; SILVER END.

STD-RI

Figure 18. MIL-STD resistor color codes.

CAPACITOR COLOR CODE MARKING
(MIL-STD CAPACITORS)

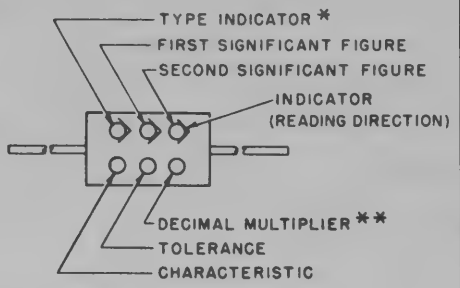

* BLACK DOT: MICA DIELECTRIC
SILVER DOT: PAPER DIELECTRIC
**INDICATES NUMBER OF ZEROS ON PAPER TYPE.

MICA (CM) AND PAPER (CN)

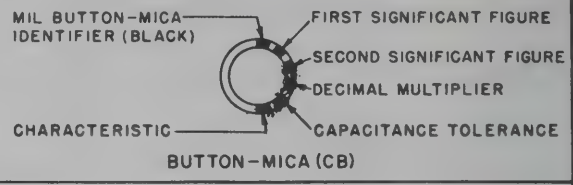

BUTTON-MICA (CB)

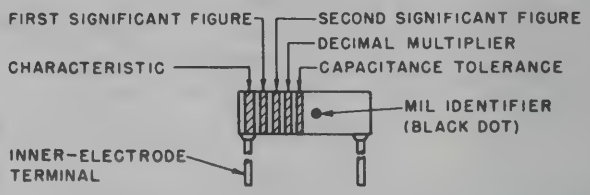

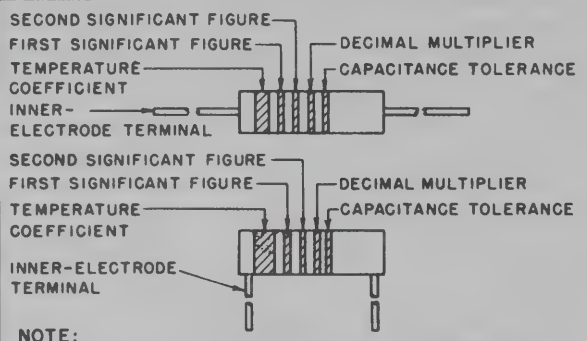

NOTE:
SPOTS MAY BE USED INSTEAD OF BANDS; TEMPERATURE COEFFICIENT MARKING IS LARGER.

CERAMIC-TEMPERATURE COMPENSATING (CC)

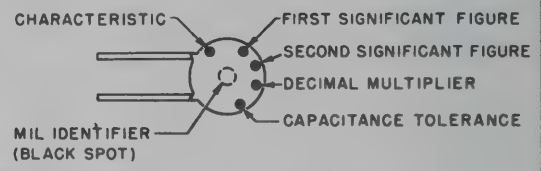

NOTES:
1. SPOTS MAY BE USED ON TUBULAR CAPACITORS; CHARACTERISTIC SPOT IS LARGER AND MIL IDENTIFIER IS ON SIDE DIAMETRICALLY OPPOSITE COLOR SPOTS.
2. MIL IDENTIFIER OF DISK TYPE IS ON REVERSE SIDE; CHARACTERISTIC SPOT IS LARGER OR SPACE BETWEEN CHARACTERISTIC AND TOLERANCE SPOTS IS THREE TIMES SPACE BETWEEN ADJACENT SPOTS.
3. TOLERANCE: YELLOW, +100%, -20%.

CERAMIC-GENERAL PURPOSE (CK)

CAPACITOR COLOR CODE

COLOR	SIG FIG.	MULTIPLIER		CHARACTERISTIC				TOLERANCE [2]					TEMPERATURE COEFFICIENT (UUF/UF/°C)
		DECIMAL	NUMBER OF ZEROS	CM	CN	CB	CK	CM	CN	CB	CC		
											OVER 10UUF	10UUF OR LESS	CC
BLACK	0	1	NONE		A			20	20	20	20	2	ZERO
BROWN	1	10	1	B	E	B	W				1		-30
RED	2	100	2	C	H		X	2		2	2		-80
ORANGE	3	1,000	3	D	J	D			30				-150
YELLOW	4	10,000	4	E	P								-220
GREEN	5		5	F	R						5	0.5	-330
BLUE	6		6		S								-470
PURPLE (VIOLET)	7		7		T	W							-750
GRAY	8		8			X						0.25	+30
WHITE	9		9								10	1	-330(±500) [3]
GOLD		0.1						5		5			+100
SILVER		0.01						10	10	10			

1. LETTERS ARE IN TYPE DESIGNATIONS GIVEN IN MIL-C SPECIFICATIONS.
2. IN PERCENT, EXCEPT IN UUF FOR CC-TYPE CAPACITORS OF 10 UUF OR LESS.
3. INTENDED FOR USE IN CIRCUITS NOT REQUIRING COMPENSATION.

STD-CI

Figure 19. MIL-STD capacitor color codes.

NOTES:
1 ALL VOLTAGE AND RESISTANCE MEASUREMENTS TAKEN WITH A 20,000 OHM/VOLT METER UNDER THE FOLLOWING CONDITIONS:
- A. C.O. POWER SWITCH TO INT.
- B. MONITOR SWITCH TO RADIO & MON.
- C. POWER SELECT SWITCH TO 115 V.
- D. AC POWER SOURCE OF 115 V OR DC POWER SOURCE OF +26 V.
- E. ALL BINDING POSTS UNTERMINATED.
- F. MONITOR HANDSET DISCONNECTED.
- G. SIGNAL CABLES W 2 AND W 3 DISCONNECTED.

2 UNLESS OTHERWISE NOTED ALL VOLTAGES ARE DC.
3 DEPENDS UPON SETTING OF R25.

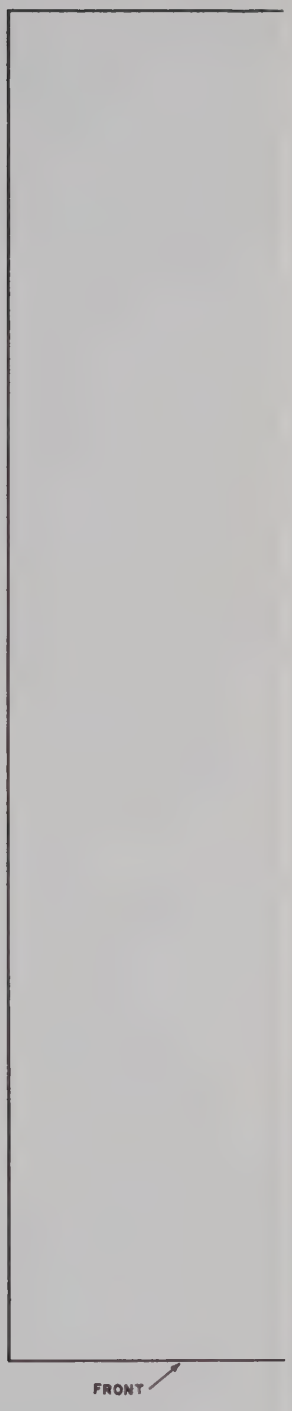

CAPACITOR COLOR CODE MARKING
(MIL-STD CAPACITORS)

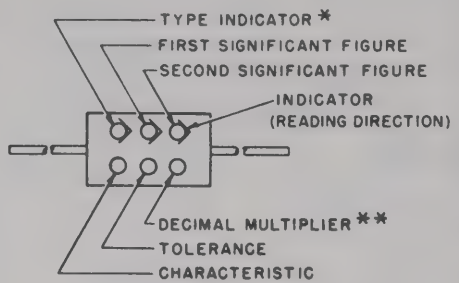

* BLACK DOT: MICA DIELECTRIC
SILVER DOT: PAPER DIELECTRIC
**INDICATES NUMBER OF ZEROS ON PAPER TYPE.

MICA (CM) AND PAPER (CN)

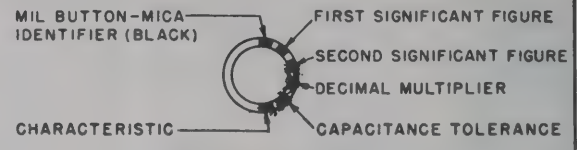

BUTTON-MICA (CB)

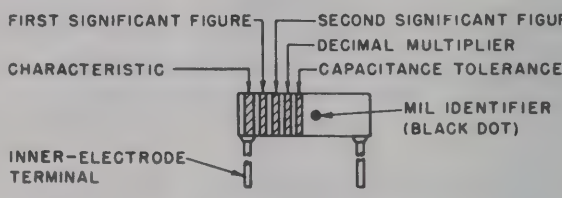

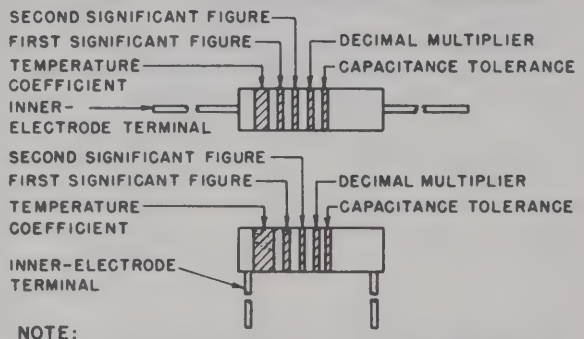

NOTE:
SPOTS MAY BE USED INSTEAD OF BANDS; TEMPERATURE COEFFICIENT MARKING IS LARGER.

CERAMIC-TEMPERATURE COMPENSATING (CC)

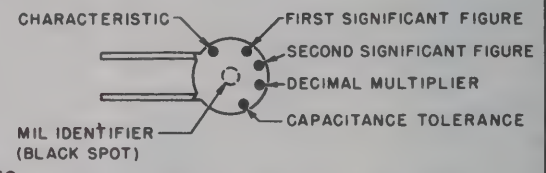

NOTES:
1. SPOTS MAY BE USED ON TUBULAR CAPACITORS; CHARACTERISTIC SPOT IS LARGER AND MIL IDENTIFIER IS ON SIDE DIAMETRICALLY OPPOSITE COLOR SPOTS.
2. MIL IDENTIFIER OF DISK TYPE IS ON REVERSE SIDE; CHARACTERISTIC SPOT IS LARGER OR SPACE BETWEEN CHARACTERISTIC AND TOLERANCE SPOTS IS THREE TIMES SPACE BETWEEN ADJACENT SPOTS.
3. TOLERANCE: YELLOW, +100%, -20%.

CERAMIC-GENERAL PURPOSE (CK)

CAPACITOR COLOR CODE

COLOR	SIG FIG.	MULTIPLIER		CHARACTERISTIC				TOLERANCE [2]					TEMPERATURE COEFFICIENT (UUF/UF/°C)
		DECIMAL	NUMBER OF ZEROS	CM	CN	CB	CK	CM	CN	CB	CC		
											OVER 10UUF	10UUF OR LESS	CC
BLACK	0	1	NONE		A			20	20	20	20	2	ZERO
BROWN	1	10	1	B	E	B	W				1		-30
RED	2	100	2	C	H		X	2		2	2		-80
ORANGE	3	1,000	3	D	J	D			30				-150
YELLOW	4	10,000	4	E	P								-220
GREEN	5		5	F	R						5	0.5	-330
BLUE	6		6		S								-470
PURPLE (VIOLET)	7		7		T	W							-750
GRAY	8		8			X						0.25	+30
WHITE	9		9								10	1	-330(±500) [3]
GOLD		0.1						5		5			+100
SILVER		0.01						10	10	10			

1. LETTERS ARE IN TYPE DESIGNATIONS GIVEN IN MIL-C SPECIFICATIONS.
2. IN PERCENT, EXCEPT IN UUF FOR CC-TYPE CAPACITORS OF 10 UUF OR LESS.
3. INTENDED FOR USE IN CIRCUITS NOT REQUIRING COMPENSATION.

STD-CI

Figure 19. MIL-STD capacitor color codes.

NOTES:
1 ALL VOLTAGE AND RESISTANCE MEASUREMENTS TAKEN WITH A 20,000 OHM/VOLT METER UNDER THE FOLLOWING CONDITIONS:
- A. CO. POWER SWITCH TO INT.
- B. MONITOR SWITCH TO T RADIO & MON.
- C. POWER SELECT SWITCH TO 115 V.
- D. AC POWER SOURCE OF 115 V OR DC POWER SOURCE OF +26 V.
- E. ALL BINDING POSTS UNTERMINATED.
- F. MONITOR HANDSET DISCONNECTED.
- G. SIGNAL CABLES W 2 AND W 3 DISCONNECTED.

2 UNLESS OTHERWISE NOTED ALL VOLTAGES ARE DC.
3 DEPENDS UPON SETTING OF R26.

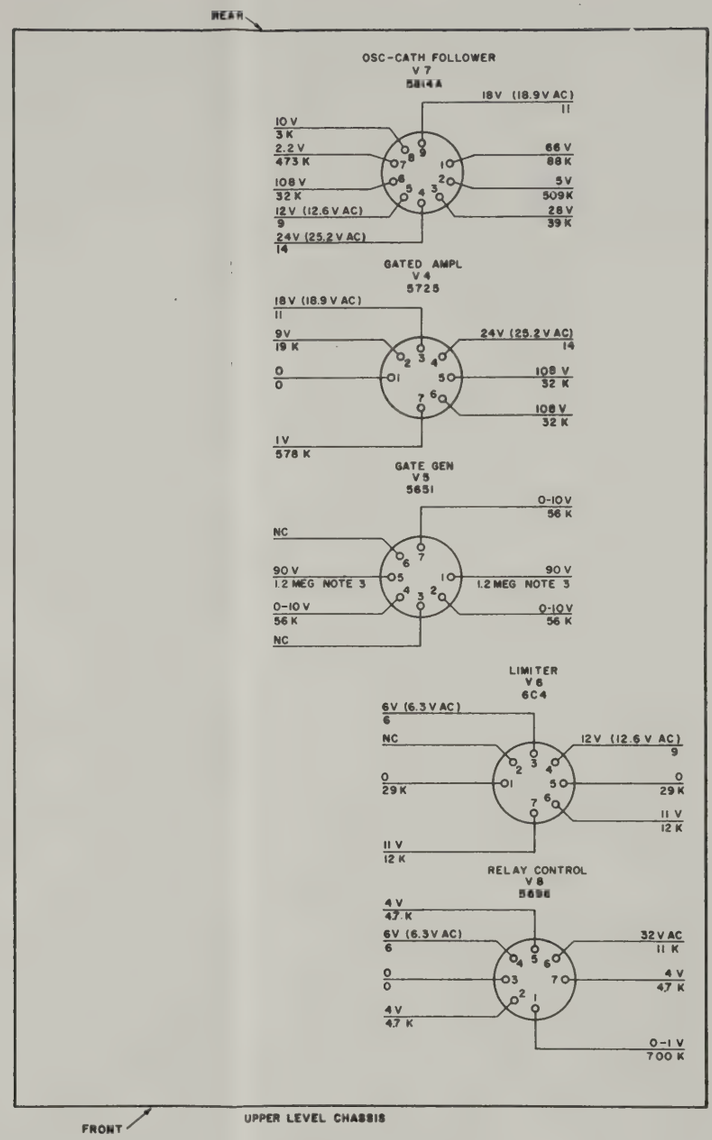

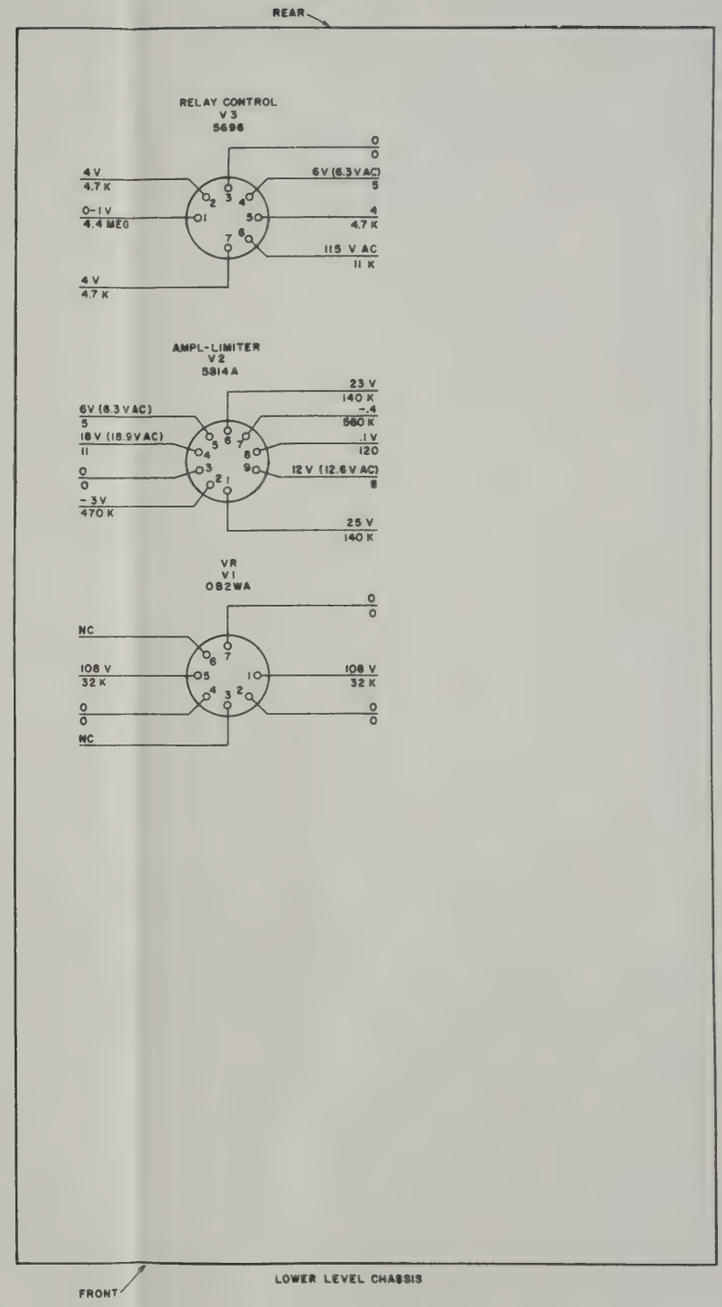

Figure 20. Voltages and resistances at tube sockets.

(2) *Troubleshooting chart.* The trouble symptoms listed in the chart (par. 36*d*) will aid in localizing trouble to a component part.

(3) *Intermittent troubles.* In all these tests, the possibility of intermittent troubles should not be overlooked. If present, this type of trouble often may be made to appear by tapping or jarring the equipment. Check the wiring and connections to the associated receiver, transmitter, and local telephone.

34. Test Equipment Required

The following chart lists the test equipment required for troubleshooting and final testing (pars. 40 and 41) the radio set control. Associated technical manuals and assigned common names are also listed.

Test equipment	Technical manual	Common name
Electronic Voltmeter ME–30B/U.	TM 11–5132	Vtvm.
Signal Generator SG–15/PCM.	TM 11–2096	Signal generator.
Frequency Meter FR–67/U.	TM 11–2698	Frequency meter.
Electron Tube Test Set TV–2/U.	TM 11–2661	Tube tester.
Audio Oscillator TS–382/U.	TM 11–2684	Audio oscillator.
Telephone Set TA–43/PT.	TM 11–337	Field telephone.
Multimeter ME–77/U.*	----------	Multimeter.
150 ohm, 1 watt resistor.		
2,000 ohm, 1 watt resistor.		
20 uf capacitor.		
Connector U–79/U.		

*Multimeter TS–297/U may be used until Multimeter ME–77/U becomes available.

Section II. TROUBLESHOOTING

35. Checking Filament and B+ Circuits for Shorts

a. When to Check. When any of the following conditions exist, check for short circuits and clear the troubles before applying power.

(1) When the nature of the trouble symptom is not known.

(2) When trouble symptoms reported from operational tests indicate possible power supply troubles.

b. Conditions for Tests. To prepare for the short-circuit tests—

(1) Remove the control unit from its case.

(2) Leave all cords and lines disconnected from the radio set control during all resistance checks.

c. Measurements. Make the resistance measurements indicated in the following chart. Resistances can vary between equipments. More than 20 per cent difference with the chart indications should be considered abnormal. If abnormal results are obtained, perform the additional isolating procedures outlined. When the faulty part is found, repair the trouble before applying power to the unit.

Points of measurement	Normal indication	Isolating procedure
Terminal A to terminal C of POWER connector.	With S1 in OFF or DC positions infinite resistance.	Check wiring; connector J2.
	With S1 in AC position, 17 ohms (S2 at 115V) or 63 ohms (S2 at 230V).	Check T1 primary; check S1 and S2.
		If infinite check F1.
Terminal A or C to terminal B of POWER connector.	Infinite resistance regardless of S1 position.	Check POWER connector, wiring, T1 primary as indicated by S1 position.
Terminal D to terminal B of POWER connector.	With S1 in OFF or AC position, infinite resistance.	Check wiring, connector J2.
	With S1 in DC position, 95 ohms.	Check F2, FL1, S1, and vibrator coil.
Junction of CR6, CR7, and L3 to ground.	35,000 ohms; charge of filter capacitor will occur.	If resistance is low, check capacitors C11A and B. Check rectifiers CR5–CR8. If resistance is high, check L3, R6, R7, seating of J1 and P1, R38, R44, and R19.
Filament terminals of tubes.	Resistances as indicated on figure 20.	Remove tubes as necessary to establish exact location of defect.

36. Localizing Troubles

a. General. In the troubleshooting chart (*d* below), procedures are outlined for localizing troubles to a stage within the radio set control. Parts locations are indicated in figures 21, 22, and 23. The overall schematic diagram is shown in figure 25. Voltage and resistance measurements at tube sockets are shown in figure 20. Coil resistances are given in paragraph 37. Depending on the nature of the operational symptoms, one or more of the localizing procedures will be necessary. When trouble has been localized to a particular stage, use voltage and resistance measurements to isolate the trouble to a particular part.

b. Use of Chart. The troubleshooting chart supplements the equipment performance check list (par. 19). If no operational symptoms are known, begin with item 1 of the equipment performance check list and proceed until a symptom of trouble appears.

Caution: If operational symptoms are not known or if they indicate the possibility of short circuits within the test set, make the short-circuit check described in paragraph 35 before applying power to the control unit.

c. Conditions for Tests. All checks outlined in the chart are to be conducted with the radio set control connected in accordance with installation instructions given in paragraph 11. A field telephone (such as Telephone Set TA–43/PT) may be connected to the LINE terminals instead of the switchboard listed in paragraph 11.

d. Troubleshooting Chart.

Note. To determine if a relay clicks, touch the fingers lightly to the relay. If the indication is not positive, use a long-bladed, heavy screw driver as a stethoscope.

Item No.	Symptom	Probable trouble	Correction
1	With monitor switch held in R RADIO & MON position:		
	a. Radio transmitter does not turn on; no 1,600-cps tone in monitor handset.	*a.* Relay K3 or K4 defective Tube V6 or V8 defective Defective monitor switch S4	*a.* Replace K3 or K4. Replace V6 or V8. Replace switch S4.
	b. Radio transmitter does not turn on; 1,600-cps tone in monitor handset.	*b.* Relay K4 defective Contacts 3 and 4 of K3 defective. RADIO cable to transmitter defective.	*b.* Replace K4. Replace K3. Replace cable.
	c. Radio transmitter turns on; no tone in monitor handset.	*c.* Defective tube V7 or V4 Defective K3 Defective handset Defective transformer T2 winding F or C.	*c.* Replace V7 or V4. Replace K3. Replace handset. Replace transformer T2.
2	With monitor switch in T RADIO & MON position:		
	a. Monitor handset button pressed, transmitter does not go on.	*a.* First and third items of 1 *b* above. Defective monitor handset switch. Defective monitor switch	*a.* First and third items of 1 *b* above. Replace handset. Replace S4.
	b. Monitor handset button pressed, transmitter on, no sidetone heard.	*b.* Defective transformer T2, winding A. Defective tube V7 Defective handset receiver	*b.* Replace transformer T2. Replace V7. Replace handset.
	c. Monitor handset button released and incoming voice signal not heard.	*c.* Squelch circuit in radio receiver improperly adjusted. Defective RADIO cable or connections to receiver. Defective transformer T2, winding D, E. Defective tube V7 Defective handset	*c.* Adjust squelch circuit in radio receiver. Check RADIO cable connections to radio receiver. Replace T2. Replace V7. Check handset and replace.
	d. Monitor handset button released and K2 (if used) does not click.	*d.* Relay K2 defective	*d.* Replace K2.

d. Troubleshooting Chart—Continued

Item No.	Symptom	Probable trouble	Correction
	With monitor switch in T RADIO & MON position—Continued		
	e. Incoming ringing signal does not cause field phone to ring.	*e.* Defective V2	*e.* Replace V2.
		Defective FL2	Replace FL2.
		Defective T1 secondary	Replace T1.
		Defective tube V3	Replace V3.
		Defective bridge network CR1–CR4.	Replace defective rectifier.
		Defective K1	Replace K1.
		Defective ringing generator G2	Replace G2.
		Defective LINE connections	Check connections.
3	With monitor switch in R TEL position and field phone connected to LINE terminals, field phone does not ring.	Last 5 items of 2 *e* above and monitor switch.	Check and replace monitor switch.
4	With monitor switch in T TEL position no communication possible with field telephone.	Defective or poor contacts in relays K2, K3, or K1.	Replace defective relay.
		Defective handset	Replace handset.
		Defective transformer T2	Replace transformer T2.
5	With field phone connected and switch S4 in T RADIO & MON position, while cranking ringing generator of field phone radio transmitter does not turn on and/or no 1,600-cps signal heard in monitor handset.	Defects listed in item 1 above. Defective bridge rectifiers CR14 through CR17.	See 1 above. Replace defective rectifiers.
6	With monitor switch in T RADIO & MON position, field phone connected and radio talking to remote field phone:		
	a. With radio in receive condition voice and beep signals from remote field phone not heard in radio.	*a.* Defective radio receiver	*a.* Check receiver.
		Defective relay K2 (if used)	Replace K2.
		Defective transformer T2	Replace T2.
		Defective contact in relays K3, K1, or K4.	Replace relay K3, K1, or K4.
	b. With radio in transmit condition beep signal not heard in radio.	*b.* Defective relay K5 or K4	*b.* Replace relay K5 or K4.
		Defective transformer T2	Replace T2.
		Defective relay K1, K2, or K3	Replace defective relay.

37. Dc Resistances of Transformers and Coils

The following table lists the resistance of the windings of the various transformers, inductors, and relay coils.

Component	Terminals	Dc resistance in ohms
K1	1–10	5, 000
K2	1–5	5, 000
K3	1–10	5, 000
K4	1–10	1, 000
K5	1–2	500
	5–6	500
L1, L2		2
L3	1–2	630
L4	1–2	490
T1	1–2	17
	2–3	29
T1	4–5	1. 5
	5–6	1. 5
	7–8	68
	9–10	70
	11–12	14
	13–14	2
	15–16	70
T2	1–2	62
	3–4	29
	4–5	12
	6–7	3
	8–9	1, 650
	10–11	1, 800
FL1	1–3	75
FL2	1–2	25
	3–4	25
G1	1–4	95

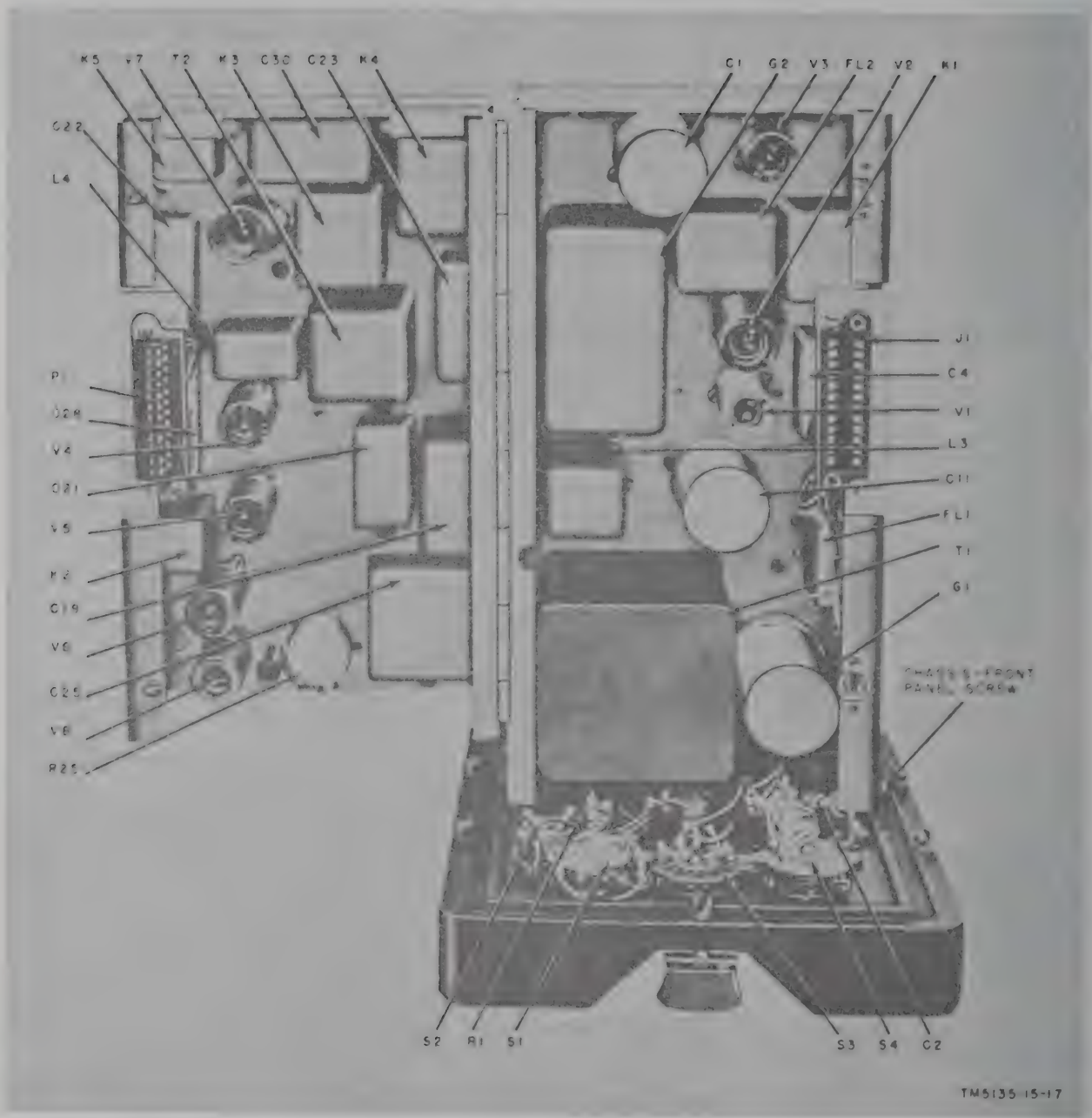

Figure 21. Control unit, upper level chassis swung open, component location.

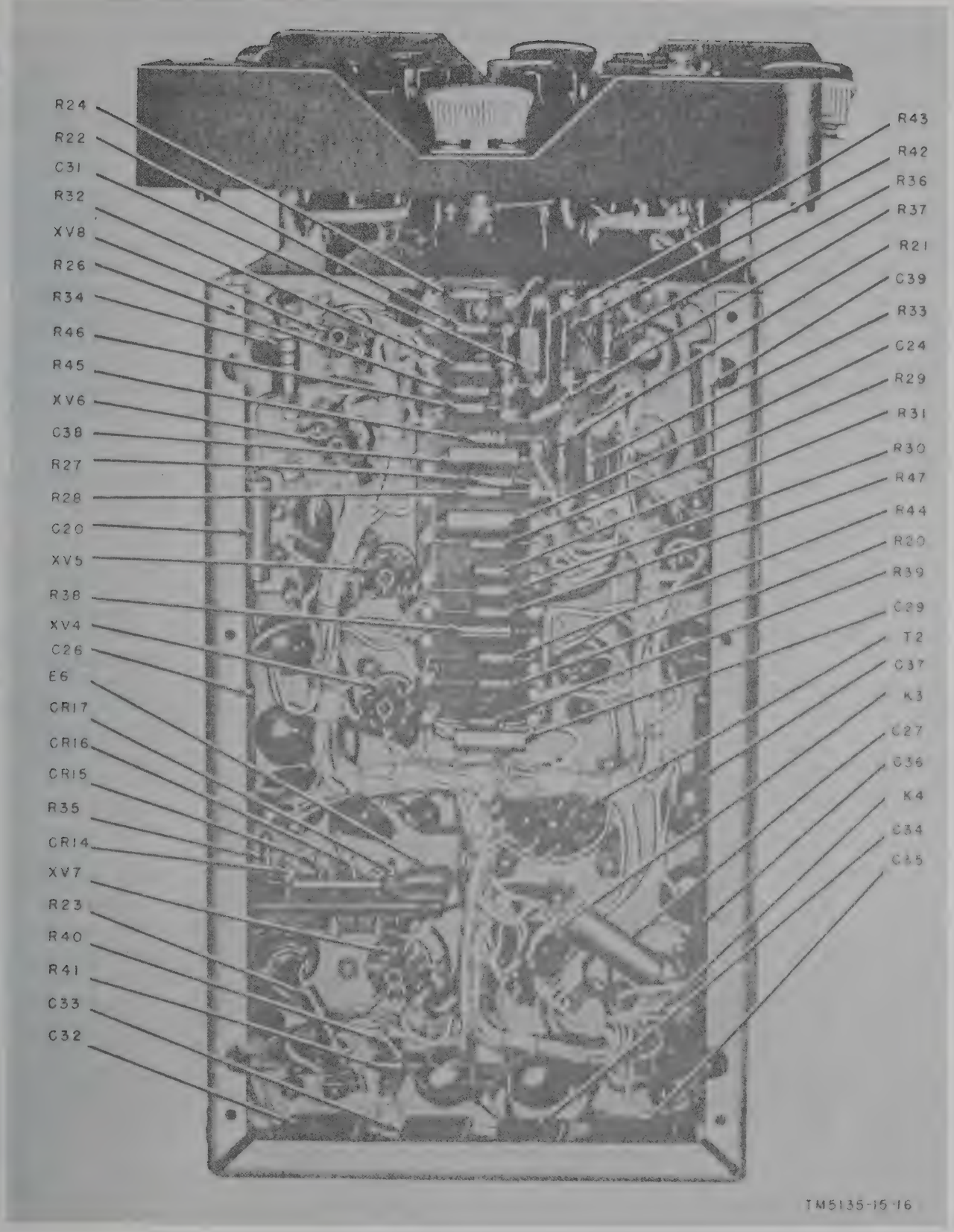

Figure 22. Upper level chassis, top view, component location.

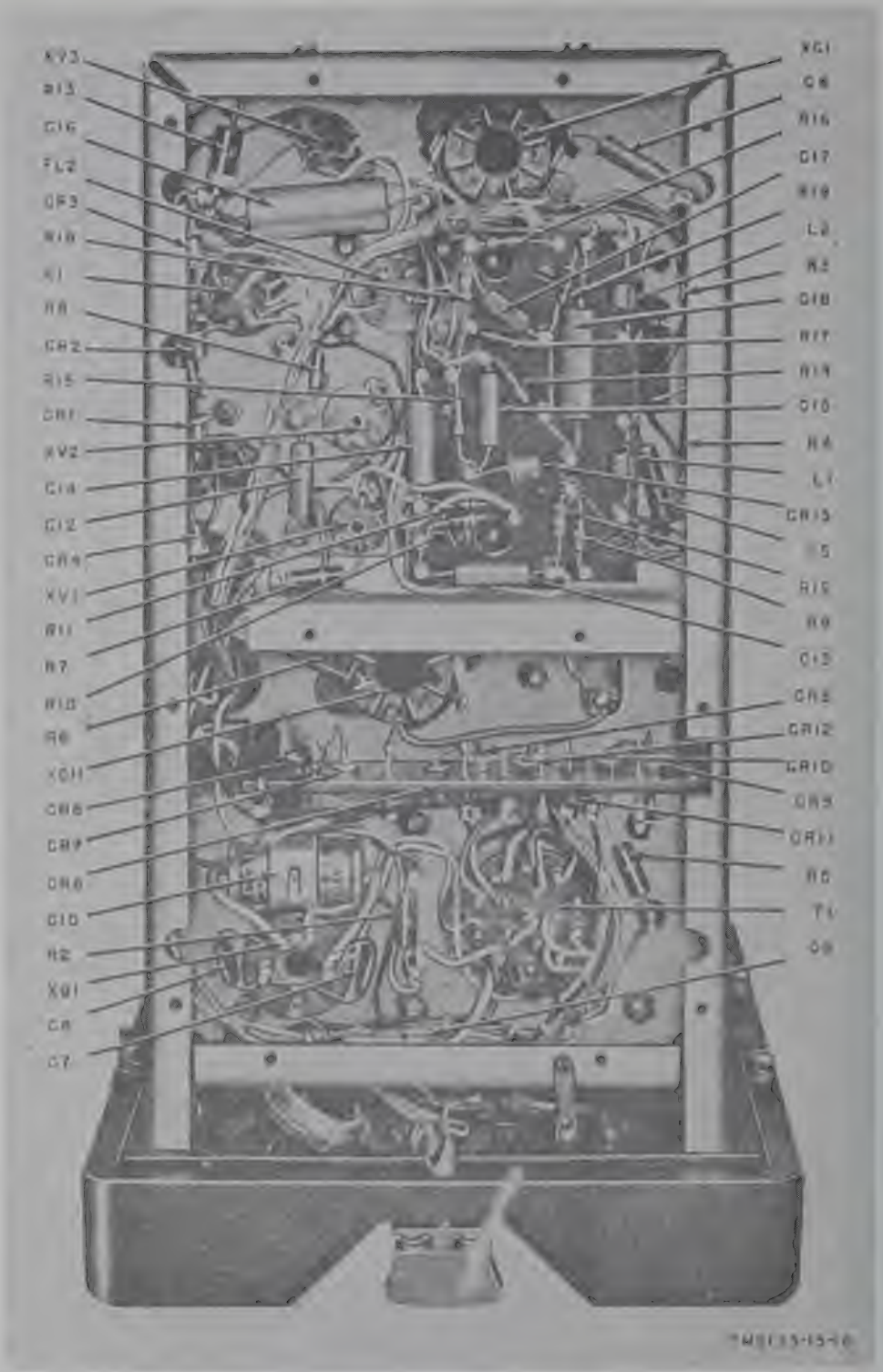

Figure 23. Lower level chassis, bottom view, component location.

Section III. REPAIRS

38. General Parts Replacement Techniques

Most parts of the radio set control can be reached easily and replaced without special procedures. The following precautions apply:

a. Before any component listed under Z1 (fig. 12) is removed from the V7B oscillator circuit, note the position of the part and its leads. Parts for this circuit come in matched sets and must be replaced as a group. Wire replacement parts in essentially the same position to avoid changing the oscillator frequency.

b. When feedthrough capacitors are being soldered, be careful to prevent the glass portion of the capacitor from cracking when the center conductor gets hot. Grasp the central lead with a pair of pliers between the glass bead and the eye of the terminal before applying heat.

c. Do not disturb the adjustment of resistor R25 when removing nearby components. This setting should be changed only when gate generator V5 is being adjusted (par. 11*l*).

39. Disassembly

a. To Remove Outer Case. Loosen the six Dzus fasteners on the front panel and remove case.

b. To Separate the Two Chassis. Loosen the two fasteners accessible through holes in the upper level chassis (fig. 3). Also loosen the two screws fastening the backplate.

c. Removal of Bottom Plate. To gain access to components in the lower level chassis (fig. 23), remove the 12 screws that hold the bottom plate.

d. Removal of Front Panel. Remove six chassis-to-front panel screws (fig. 21) on the right and left sides of the front panel. In separating the panel from the chassis do not strain the connecting wires and cables.

Section IV. FINAL TESTING

40. Check of 1,600-Cps Output Level

a. Connect the control unit to the available source of power in accordance with instructions in paragraph 11*a*. Set the C. O. POWER switch to the EXT. position and the monitor switch to the T RADIO & MON position.

b. Solder the 150-ohm resistor across terminals C and E of a U–79/U connector. Mate this connector with either RADIO receptacle J3 or J4.

c. Connect the field telephone, frequency meter and vacuum tube voltmeter (vtvm) to the control unit and resistor as shown in A, figure 24.

d. Apply a signal of 20 volts ±2 volts rms at 20 cps across the LINE terminals. Either a field telephone or Audio Oscillator TS–382/U may be used to supply this voltage. If a Telephone Set TA–43/PT is used, measure the output across the LINE terminals with a vtvm to make sure that the correct voltage is supplied.

e. The voltage output across the 150-ohm resistor should be between .1 and .2 volts rms (−6 to −11 dbm).

f. The frequency at the resistive load should be 1,600 ±20 cps.

41. Check of 20-Cps Output Level

a. Connect the control unit to the available source of power and set switches as described in paragraph 40*a*.

b. Connect the 20 microfarad (uf) capacitor and 2,000-ohm resistor in series across the LINE terminals.

c. Attach a U–79/U connector to either RADIO receptacle J3 or J4 and connect the signal generator to terminals A and B.

d. Connect the vtvm and frequency meter across the 2,000-ohm resistor as illustrated in B, figure 24.

e. Apply a signal of 1,600 cps at −20 dbm (77.5 millivolts (mv), rms) across pins A and B of either RADIO receptacles J3 or J4. Either Signal Generator SG–15/PCM or Audio Oscillator TS–382/U may be used to apply this signal.

f. The output voltage across the 2,000-ohm resistor should be a minimum of 40 volts rms.

g. The output frequency should be 20 ±2 cps.

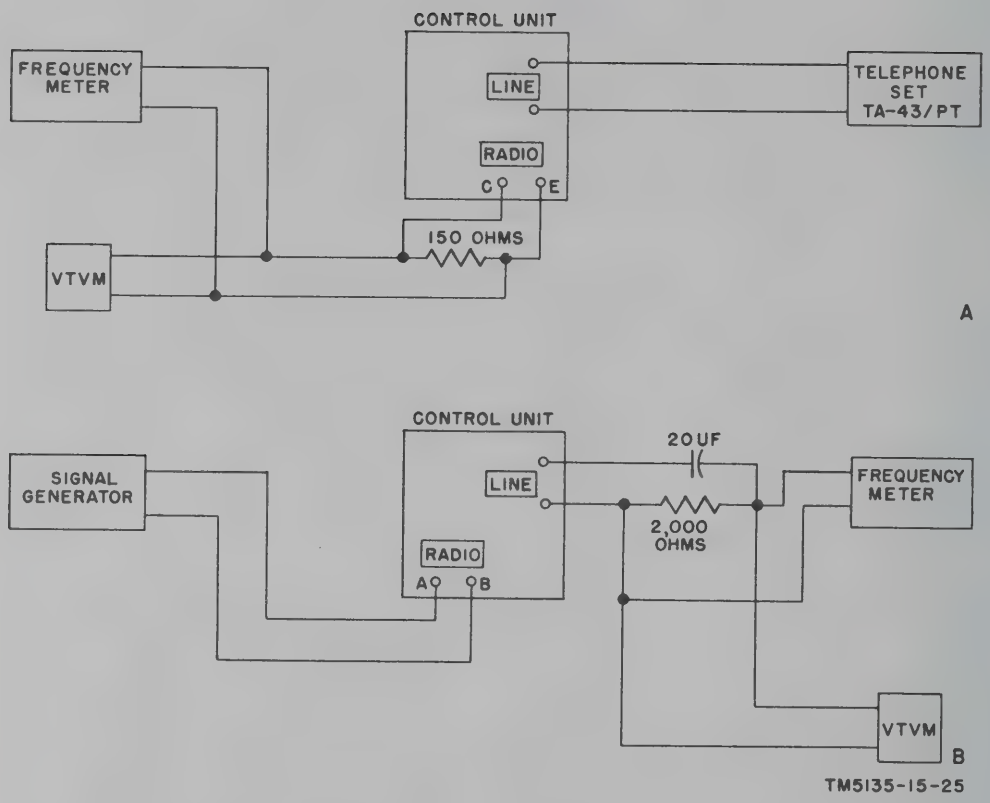

Figure 24. Test equipment connections for final tests.

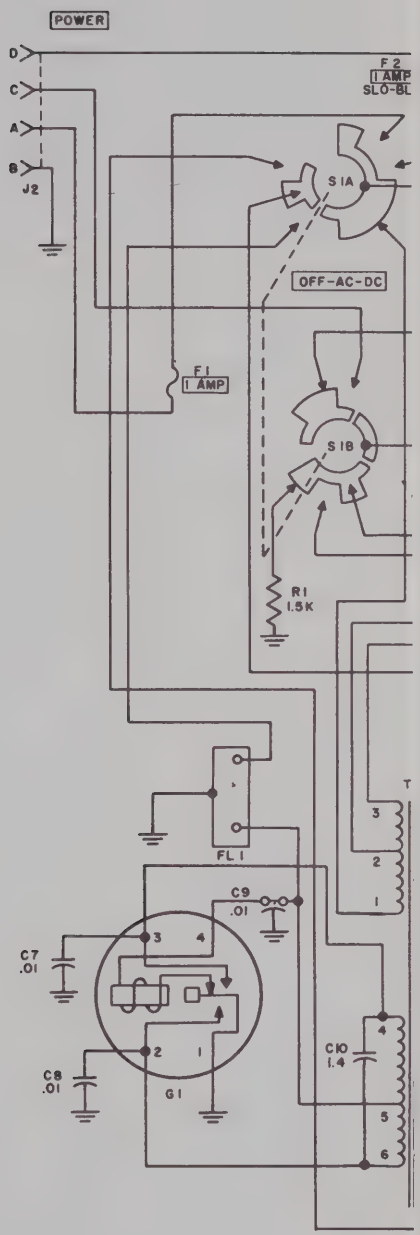
POWER
D
C
A
B
J2
F 2
I AMP
SLO-BL
S 1A
OFF-AC-DC
F 1
I AMP
S 1B
R1
1.5K
FL 1
C9
.01
C7
.01
C8
.01
G1
C10
1.4
T
3
2
1
4
5
6

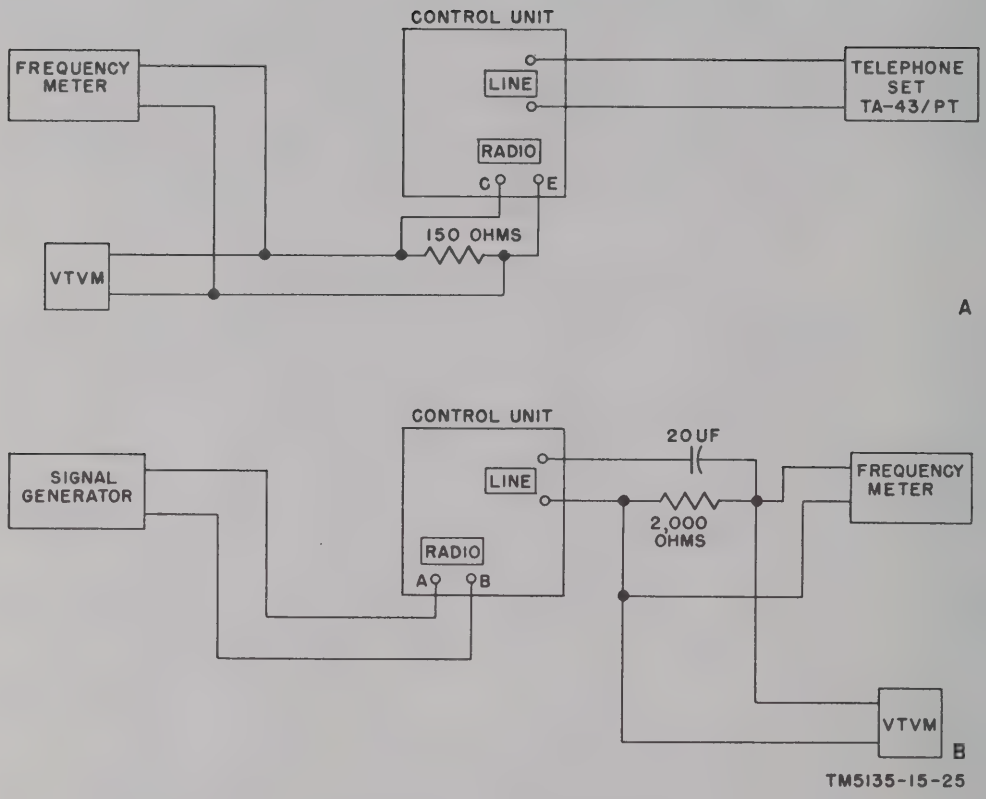

Figure 24. Test equipment connections for final tests.

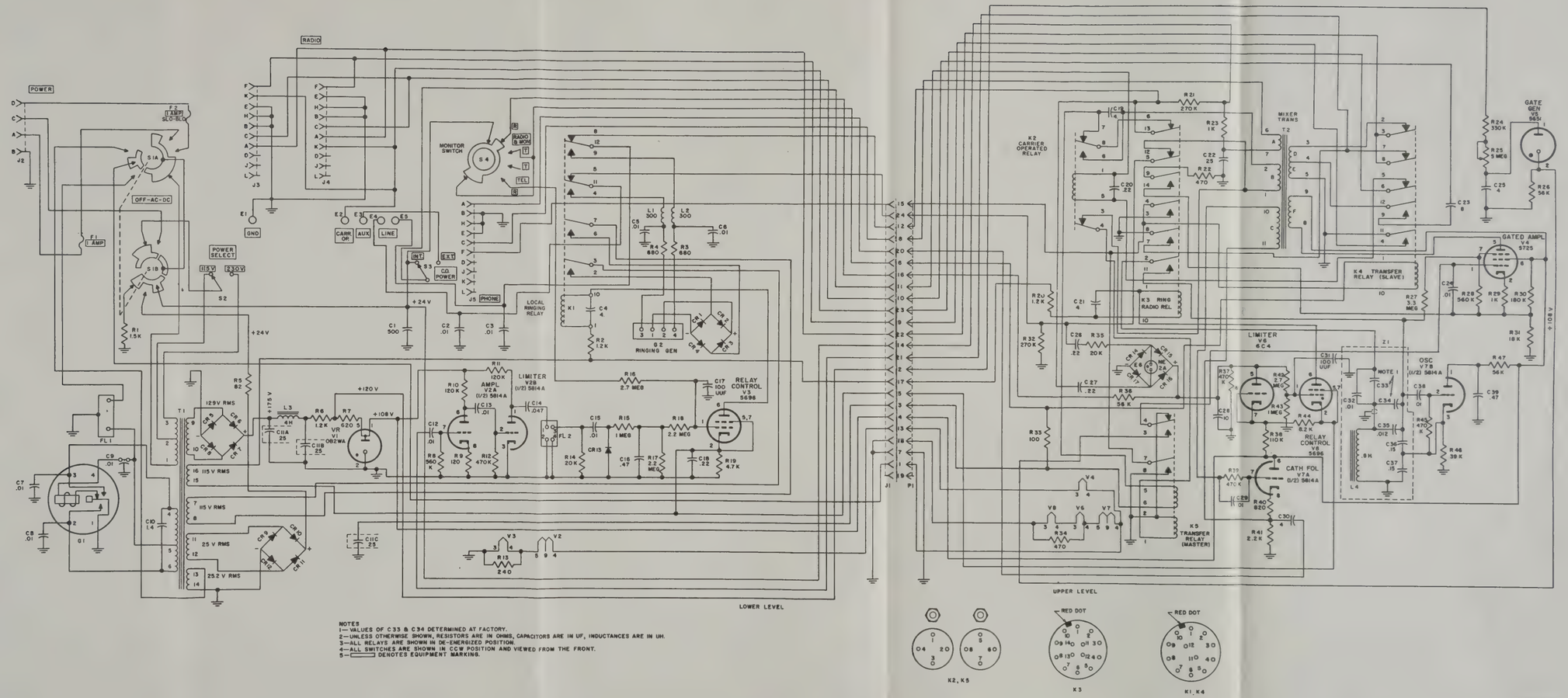

NOTES
1—VALUES OF C33 & C34 DETERMINED AT FACTORY.
2—UNLESS OTHERWISE SHOWN, RESISTORS ARE IN OHMS, CAPACITORS ARE IN UF, INDUCTANCES ARE IN UH.
3—ALL RELAYS ARE SHOWN IN DE-ENERGIZED POSITION.
4—ALL SWITCHES ARE SHOWN IN CCW POSITION AND VIEWED FROM THE FRONT.
5—▭ DENOTES EQUIPMENT MARKING.

Figure 25. Radio Set Control AN/GSA-7, schematic diagram.

TM 5135-15-23

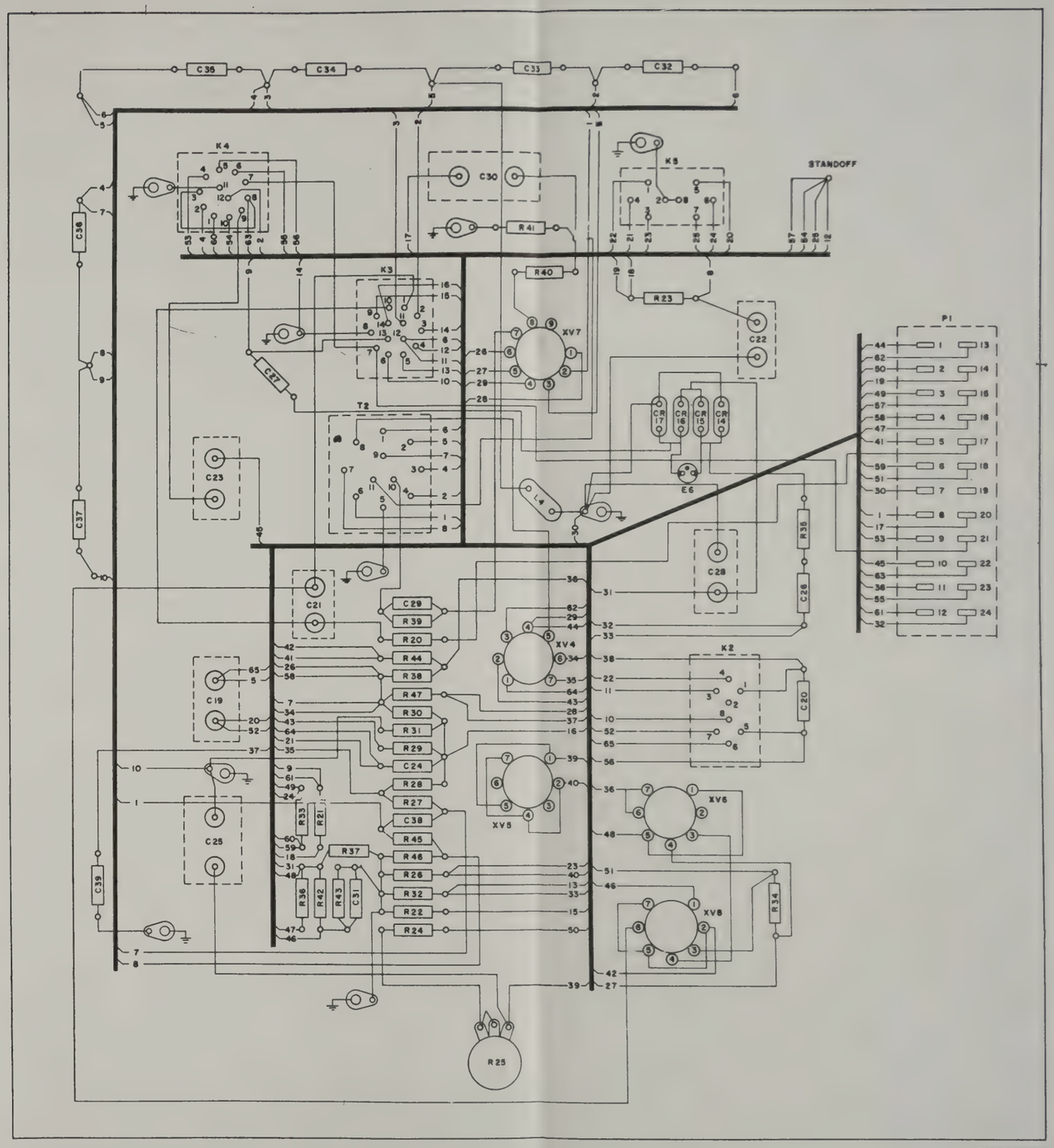

TM 5135-15-26

Figure 26. Upper level chassis, wiring diagram.

CHAPTER 6

SHIPMENT AND LIMITED STORAGE AND DEMOLITION TO PREVENT ENEMY USE

Section I. SHIPMENT AND LIMITED STORAGE

42. Disassembly of Equipment

a. Disconnect all cables from the control unit and from the power source and associated receivers and transmitters. Wind the cables and tie them in coils. Place the coiled cables in the canvas bag.

b. Remove the control unit from the mounting and then unbolt Mounting MT–791/U from its fixed position. Remount the control unit on the unting.

43. Repackaging for Shipment or Limited Storage

The exact procedure for repackaging depends on the material available and the conditions under which the equipment is to be shipped or stored. Use the procedures outlined below whenever possible.

a. Material Requirements.

(1) The following materials are required for packaging the radio set:

Material	Quantity
Corrugated cardboard	10 sq ft.
Filler material	3 lb.
Gummed tape	5 ft.
Waterproof paper	15 sq ft.
Metal strapping	15 ft.

(2) Construct a wooden box the inside dimensions of which are approximately 15 by 15 by 18 inches.

b. Packaging.

(1) Cushion the control unit on its mount on all surfaces with pads of filler material. Place the cushioned unit within a wrap of corrugated cardboard. Secure the wrap with gummed tape.

(2) In similar fashion, wrap the running spares.

(3) Line the inside of the wooden box with waterproof paper.

(4) Place the packaged control unit and mount, the canvas bag with cables, and the package of running spares in the wooden box.

(5) Fill excess space in the box with pads of corrugated cardboard and filler material.

(6) Use metal strapping around the box if intertheater shipment is intended.

Section II. DEMOLITION OF MATERIEL TO PREVENT ENEMY USE

44. Authority for Demolition

Demolition of the equipment will be accomplished only upon the order of the commander. The destruction procedures outlined in paragraph 45 will be used to prevent further use of the equipment.

45. Methods of Destruction

Use any or all of the following methods to destroy the equipment.

a. Smash. Smash the controls, tubes, switches, capacitors, and transformers; use sledges, axes, handaxes, pickaxes, hammers, or crowbars.

b. Cut. Cut the signal and power cords; use axes, handaxes, or machetes.

c. Burn. Burn cords and technical manuals; use gasoline, kerosene, oil, flame throwers, or incendiary grenades.

d. Bend. Bend panel and cabinet.

e. Explode. If explosives are necessary, use firearms, grenades, or TNT.

f. Dispose. Bury or scatter the destroyed parts in slit trenches, fox holes, or throw them into streams.

APPENDIX I

REFERENCES

Following is a list of applicable references for the operator, unit repairman, and field and depot maintenance repairman for Radio Set Control AN/GSA–7.

TM 11–284_____ Radio Sets AN/GRC–3, –4, –5, –6, –7, and –8.

TM 11–337_____ Telephone Sets TA–43/PT and TA–263/PT.

TM 11–612_____ Radio Sets AN/PRC–8, –8A, –9, –9A, –10, –10A, and –28, Operation and Organizational Maintenance.

TM 11–4065A___ Radio Sets AN/PRC–8A, –9A, –10A, and –28, Field Maintenance.

APPENDIX II

MAINTENANCE ALLOCATION CHART

FOR

CONTROL, RADIO SET AN/GSA-7

Section I. PREFACE

1. General

a. The maintenance allocation portion of the Technical Manual assigns maintenance functions and repair operations to be performed by the lowest appropriate maintenance echelon.

b. The lists in Section II are presented in columns titled as follows:

(1) PART OR COMPONENT. Only the nomenclature or standard item name is annotated in this column. Additional descriptive data is included only where clarification is necessary to identify the part. Components and parts comprising a major end item are listed alphabetically. Assemblies and sub-assemblies are in alphabetical sequence with their components listed alphabetically immediately below the assembly listing.

(2) RELATED OPERATION. This column indicated the various maintenance functions allocated to the echelon capable of performing the operation. These are defined as follows:

(a) Service. To clean, to preserve, and to replenish fuel and lubricants.

(b) Adjust. To regulate periodically to prevent malfunction.

(c) Inspect. To verify serviceability and to detect incipient electrical or mechanical failure by scrutiny.

(d) Test. To verify serviceability and to detect incipient electrical or mechanical failure by use of special equipment such as gages, meters, etc.

(e) Replace. To substitute serviceable assemblies, sub-assemblies, and parts for unserviceable components.

(f) Repair. To restore to a serviceable condition by replacing unserviceable parts or by any other action required utilizing tools, equipment and skills available, to include welding, grinding, riveting, straightening, adjusting, etc.

(g) Align. To adjust two or more components of an electrical system so that their functions are properly synchronized.

(h) Calibrate. To determine, check, or rectify the graduation of an instrument, weapon, or weapons system, or components of a weapons system.

(i) Rebuild. To restore to a condition comparable to new by disassembling the item to determine the condition of each of its component parts and reassembling it using serviceable, rebuilt, or new assemblies, sub-assemblies, and parts.

(3) ECHELON ALLOCATED THE MAINTENANCE OPERATION. The symbol "X" placed in the appropriate column indicates the echelon responsible for performing that particular maintenance operation, but does not necessarily indicate that repair parts will be stocked at that level. Echelons higher than the echelon marked by "X" are authorized to perform the indicated operation.

(4) REPAIR FACILITIES CODE. Code numbers are assigned to each individual tool equipment, test equipment and maintenance equipment referenced under "Inclosure To The Maintenance Allocation Chart". The grouping of codes in the Repair Facilities Code Column of the Maintenance Allocation Chart indicates the tool, test and maintenance equipment required to perform the maintenance operation.

(5) REMARKS. Entries in this column will be utilized when necessary to clarify any of the data cited in the preceeding columns.

(6) INCLOSURE TO THE MAINTENANCE ALLOCATION CHART.

(a) FACILITIES REQUIRED FOR MAINTENANCE OPERATIONS. Tools, test and maintenance equipment required to perform the maintenance functions are listed in this column and coded in the Repair Facilities Code column.

(b) ECHELON ALLOCATED THE FACILITY. The symbol "†" placed in the appropriate columns indicates the echelons allocated the facility.

2. Comments or Suggestions

Any comments concerning omissions and discrepancies in this appendix will be prepared on DA Form 2028 and forwarded directly to Commanding Officer, U. S. Army Signal Equipment Support Agency, Fort Monmouth, New Jersey, Attn: SIGFM/ES-ML.

APPENDIX II

MAINTENANCE ALLOCATION CHART, PART III, SECTION II

PART OR COMPONENT	RELATED OPERATION	ECHELON ALLOCATED THE MAINTENANCE OPERATION						REPAIR FACILITIES CODE	REFERENCE
		OPERATOR	ORGANIZATIONAL		FIELD		DEPOT		
		FIRST ECHELON	SECOND ECHELON		THIRD ECHELON	FOURTH ECHELON	FIFTH ECHELON		
			TACTICAL	FIXED					
CONTROL, RADIO SET AN/GSA-7	service	X							
	adjust				X			9	
	inspect		X					8	
	test		X		X	X	X	1, 2, 3, 4, 5, 6, 7	Performs continuity test, voltage check to determine condition of circuits, test tubes. Inspect external parts. Performs adjustments, align repaired equipment, trouble shoots by sectionalizing and localizing trouble to component parts. Makes all tests.
	replace		X						
	align				X				
	rebuild						X		
CABLES	replace		X						
	repair				X				
CAPACITORS	replace				X				
CONNECTOR, PLUG	service				X				
	replace				X				
CONNECTOR, RECEPTACLE	replace				X				
CRYSTAL UNIT, RECTIFYING	replace				X				
ELECTRON TUBE	test		X						
	replace	X							
FILTER, BAND-PASS	replace				X				
FUSE, CARTRIDGE	replace	X							

APPENDIX II

MAINTENANCE ALLOCATION CHART, PART III, SECTION II

PART OR COMPONENT	RELATED OPERATION	ECHELON ALLOCATED THE MAINTENANCE OPERATION						REPAIR FACILITIES CODE	REFERENCE
		OPERATOR	ORGANIZATIONAL		FIELD		DEPOT		
		FIRST ECHELON	SECOND ECHELON TACTICAL	SECOND ECHELON FIXED	THIRD ECHELON	FOURTH ECHELON	FIFTH ECHELON		
AN/GSA-7 (continued)									
GENERATOR, RINGING, STATIC	test				X				
	replace				X				
KNOBS	replace		X						
LAMP, GLOW	replace		X						
POST, BINDING	replace				X				
REACTOR	replace				X				
SOCKET, ELECTRON TUBE	replace				X				
SUPPRESSOR, ELECTRICAL NOISE	replace				X				
SWITCH, ROTARY	replace				X				
TRANSFORMERS	replace				X				
VIBRATOR, NON-SYNCHRONOUS	replace				X				

APPENDIX II
INCLOSURE TO THE
MAINTENANCE ALLOCATION CHART, PART II, SECTION III

FACILITIES REQUIRED FOR MAINTENANCE OPERATIONS	ECHELON ALLOCATED THE FACILITY						REPAIR FACILITIES' CODE	REFERENCE
	OPERATOR	ORGANIZATIONAL		FIELD		DEPOT		
	FIRST ECHELON	SECOND ECHELON		THIRD ECHELON	FOURTH ECHELON	FIFTH ECHELON		
		TACTICAL	FIXED					
AN/GSA-7 (continued)								
MULTIMETER ME-77/U		†					1	
SHUNT INSTRUMENT MULTIRANGE MX-1471/U		†					2	
TEST SET, ELECTRON TUBE TV-7/U		†					3	
TEST SET, ELECTRON TUBE TV-2/U						†	4	
VOLTMETER, METER ME-30/U					†		5	
SIGNAL GENERATOR SG-15/PCM					†		6	
FREQUENCY METER FR-67/U					†		7	
TOOL EQUIPMENT TE-41		†					8	
TOOL EQUIPMENT TE-113				†			9	

DEPARTMENT OF THE ARMY
US ARMY AG PUBLICATIONS CENTER
1655 WOODSON ROAD
ST. LOUIS, MISSOURI 63114

OFFICIAL BUSINESS
PENALTY FOR PRIVATE USE $300

POSTAGE AND FEES PAID
DEPARTMENT OF THE ARMY
DOD 314